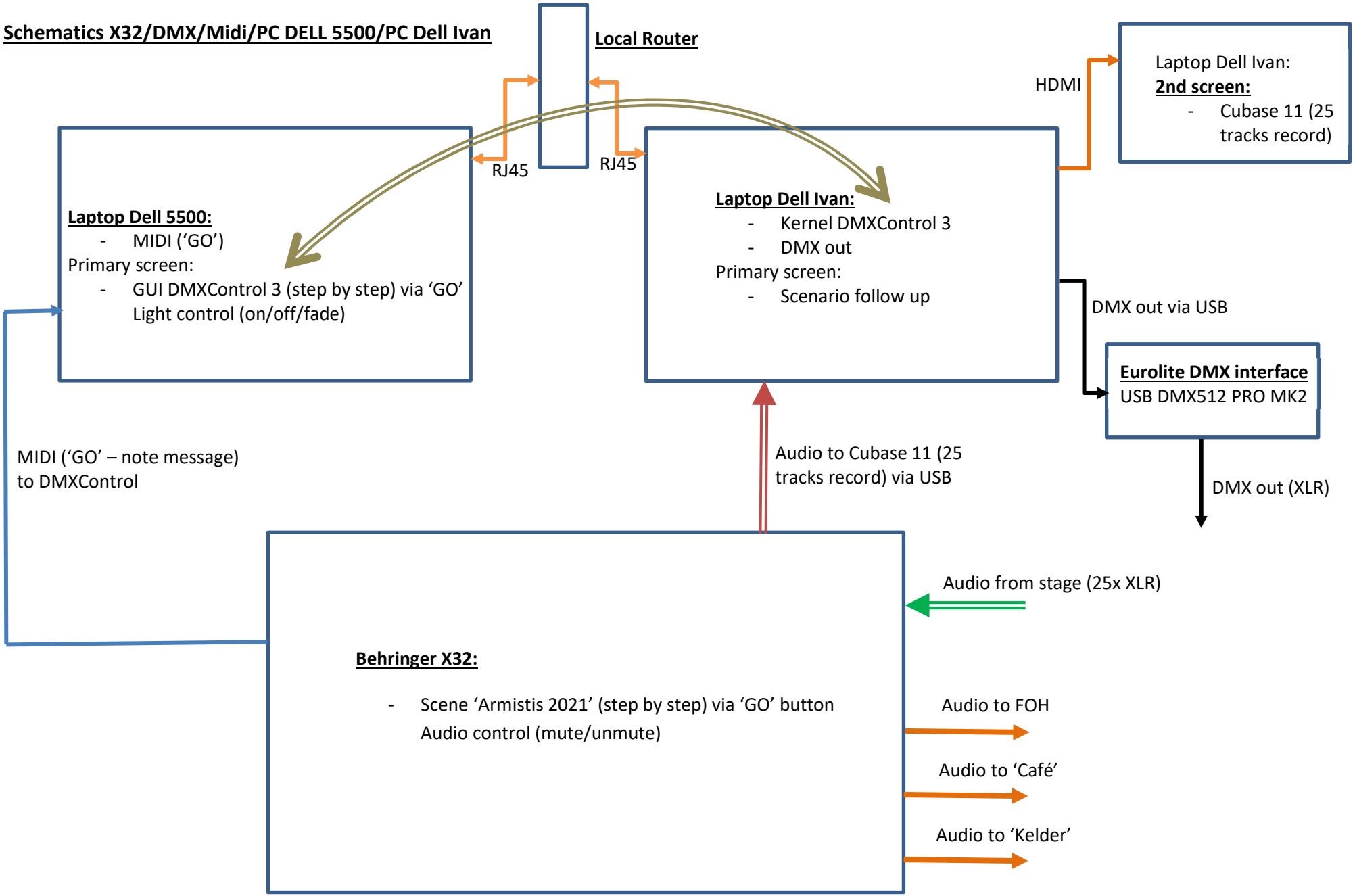Schematics X32/DMX/Midi/PC DELL 5500/PC Dell Ivan