MANUAL

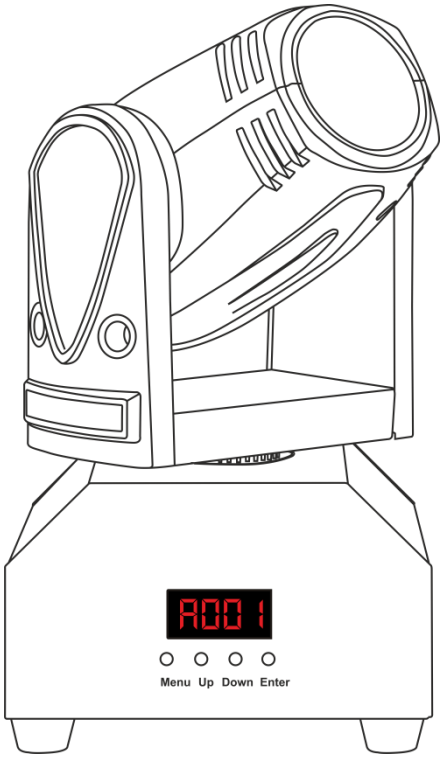

ENGLISH

XS-1 RGBW

V1

Ordercode: 40159

Highlite International B.V. – Vestastraat 2 – 6468 EX – Kerkrade – the Netherlands

Table of contents

Warning 2
Unpacking Instructions 2
LED Expected Lifespan 2
Safety Instructions 2
Operating Determinations 4
Rigging 4
Connection with the mains 5
Return Procedure 6
Claims 6

Description of the device 7
Overview 7
Backside 8

Installation 8

Set Up and Operation 8
Control Modes 9
One XS-1 RGBW (Built-in Programs and Manual) 9
One XS-1 RGBW (Sound-controlled) 9
Multiple XS-1 moving heads (Master/Slave control) 9
Multiple XS-1 moving heads (DMX Control) 10
Fixture Linking 11
Data Cabling 11
Control Panel 12
Control Mode 12
DMX Addressing 12
Menu Overview 13
Main Menu Options 14
1. DMX Addressing 15
2. Channel Mode 15
3. Slave Mode 15
4. Auto programs 15
5. Sound control Mode 15
6. Sensitivity Mode 16
7. Blackout/DMX Fail Mode 16
8. Display Mode 16
9. Display settings 16
10. Pan Invert 16
11. Tilt Invert 16
12. Manual control 17
13. Test 17
14. Lifetime 17
15. Firmware Version 17
16. Reset 17

DMX Channels 18
9 Channels 18
16 Channels 19

Maintenance 20
Replacing a Fuse 21

Troubleshooting 21
No Light 21
No Response to DMX 21

Product Specifications 23

Dimensions 24

Notes 25

Warning

For your own safety, please read this user manual carefully before your initial start-up!

Unpacking Instructions

Immediately upon receiving this product, carefully unpack the carton and check the contents to ensure that all parts are present, and have been received in good condition. Notify the dealer immediately and retain packing material for inspection if any parts appear damaged from shipping or the carton itself shows signs of mishandling. Save the carton and all packing materials. In the event that a fixture must be returned to the factory, it is important that the fixture be returned in the original factory box and packing.

Your shipment includes:

- Showtec XS-1 RGBW
- 1 mounting bracket
- IEC power cable 0,85 m
- 2 mounting M10 screws
- User manual

LED Expected Lifespan

LEDs gradually decline in brightness over time. HEAT is the dominant factor that leads to the acceleration of this decline. Packaged in clusters, LEDs exhibit higher operating temperatures than in ideal or singular optimum conditions. For this reason, when all color LEDs are used at their fullest intensity, life of the LEDs is significantly reduced. If improving the lifespan is of higher priority, place care in providing for lower operational temperatures. This may include climatic-environmental and the reduction of overall projection intensity.

CAUTION!
Keep this device away from rain and moisture!
Unplug mains lead before opening the housing!

Safety Instructions

Every person involved with the installation, operation and maintenance of this device has to:

- be qualified
- follow the instructions of this manual

CAUTION! Be careful with your operations.
With a dangerous voltage you can suffer
a dangerous electric shock when touching the wires!

Before the initial start-up, please make sure that there is no damage caused by transportation. Should there be any, consult your dealer and do not use the device.

To maintain perfect condition and to ensure a safe operation, it is absolutely necessary for the user to follow the safety instructions and warning notes contained in this manual.

Please consider that damages caused by manual modifications to the device are not subject to warranty.

This device contains no user-serviceable parts. Refer to qualified technicians only.

IMPORTANT:

The manufacturer will not accept liability for any resulting damages caused by the non-observance of this manual or any unauthorized modification to the device.

- Never let the power cord come into contact with other cables! Handle the power cord and all connections with the mains with particular caution!
- Never remove warning or informative labels from the unit.
- Never use anything to cover the ground contact.
- Never lift the fixture holding it by the projector-head, as the mechanics may be damaged. Always hold the fixture by the transport handles.
- Never place any material over the lens.
- Never look directly into the light source.
- Never leave any cables lying around.
- Never loosen the screws of the gobo, otherwise you risk opening of the ball bearing.
- Do not insert objects into air vents.
- Do not connect this device to a dimmerpack.
- Do not switch the device on and off in short intervals, as this will reduce the device's life.
- Do not touch the device's housing bare-handed during its operation (housing becomes very hot). Allow the fixture to cool for at least 5 minutes before handling.
- Do not shake the device. Avoid brute force when installing or operating the device.
- Only use the device indoors, avoid contact with water or other liquids.
- Only operate the fixture after having checked if the housing is firmly closed and all screws are tightly fastened.
- Only operate the device after having familiarized with its functions.
- Avoid flames and do not put close to flammable liquids or gases.
- Always keep the case closed while operating.
- Always allow a free air space of at least 50 cm around the unit for ventilation.
- Always disconnect power from the mains, when device is not used or before cleaning! Only handle the power cord holding it by the plug. Never pull out the plug by tugging the power cord.
- Make sure that the device is not exposed to extreme heat, moisture or dust.
- Make sure that the available voltage is not higher than stated on the rear panel.
- Make sure that the power cord is never crimped or damaged. Check the device and the power cord from time to time.
- If the lens is obviously damaged, it has to be replaced.
- If device was dropped or struck, disconnect mains power supply immediately. Have a qualified engineer inspect for safety before operating.
- If the device has been exposed to drastic temperature fluctuation (e.g. after transportation), do not switch it on immediately. The arising condensation water might damage your device. Leave the device switched off until it has reached room temperature.
- If your Showtec device fails to work properly, discontinue the use immediately. Pack the unit securely (preferably in the original packing material), and return it to your Showtec dealer for service.
- For adult use only. The moving head must be installed beyond the reach of children. Never leave the unit running unattended.
- Never attempt to bypass the thermostatic switch or fuses.
- For replacement use fuses of same type and rating only.
- The user is responsible for correct positioning and operating of the XS-1 RGBW. The manufacturer will not accept liability for damages caused by the misuse or incorrect installation of this device.
- This device falls under protection class I. Therefore it is essential to connect the yellow/green conductor to earth.
- During the initial start-up some smoke or smell may arise. This is a normal process and does not necessarily mean that the device is defective.
- Repairs, servicing and electric connection must be carried out by a qualified technician.
- WARRANTY: Till one year after date of purchase.

CAUTION! EYEDAMAGES !!!
NEVER LOOK DIRECTLY INTO THE LIGHTSOURCE !!!

Operating Determinations

- This device is not designed for permanent operation. Consistent operation breaks will ensure that the device will serve you for a long time without defects.
- The minimum distance between light output and the illuminated surface must be bigger than 1 meter.
- The maximum ambient temperature t_a = 40°C must never be exceeded.
- The relative humidity must not exceed 50 % with an ambient temperature of 40° C.
- If this device is operated in any other way than the one described in this manual, the product may suffer damages and the warranty becomes void.
- Any other operation may lead to dangers like short-circuit, burns, electric shock, crash, etc.

You endanger your own safety and the safety of others!

Rigging

Please follow the European and national guidelines concerning rigging, trussing and all other safety issues.

Do not attempt the installation yourself !
Always let the installation be carried out by an authorized dealer !

Procedure:

- If the projector is lowered from the ceiling or high joists, professional trussing systems have to be used.
- Use a clamp to mount the projector, with the mounting bracket, to the trussing system.
- The projector must never be fixed swinging freely in the room.
- The installation must always be secured with a safety attachment, e.g. an appropriate safety net or safety cable.
- When rigging, derigging or servicing the projector, always make sure, that the area below the installation site is secured and that there are not any unauthorized people around.

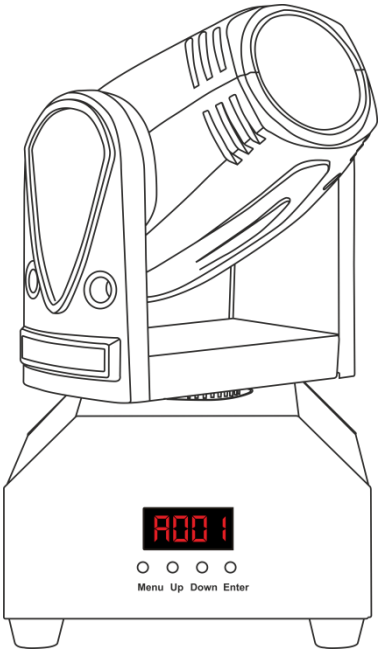

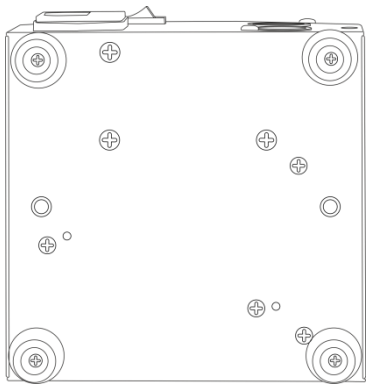

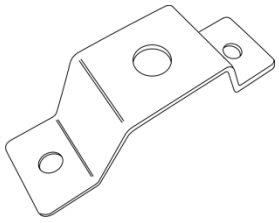

The XS-1 can be placed on a flat stage floor or mounted to any kind of truss with a clamp.

Mounting a clamp to the underside of the XS-1 moving head

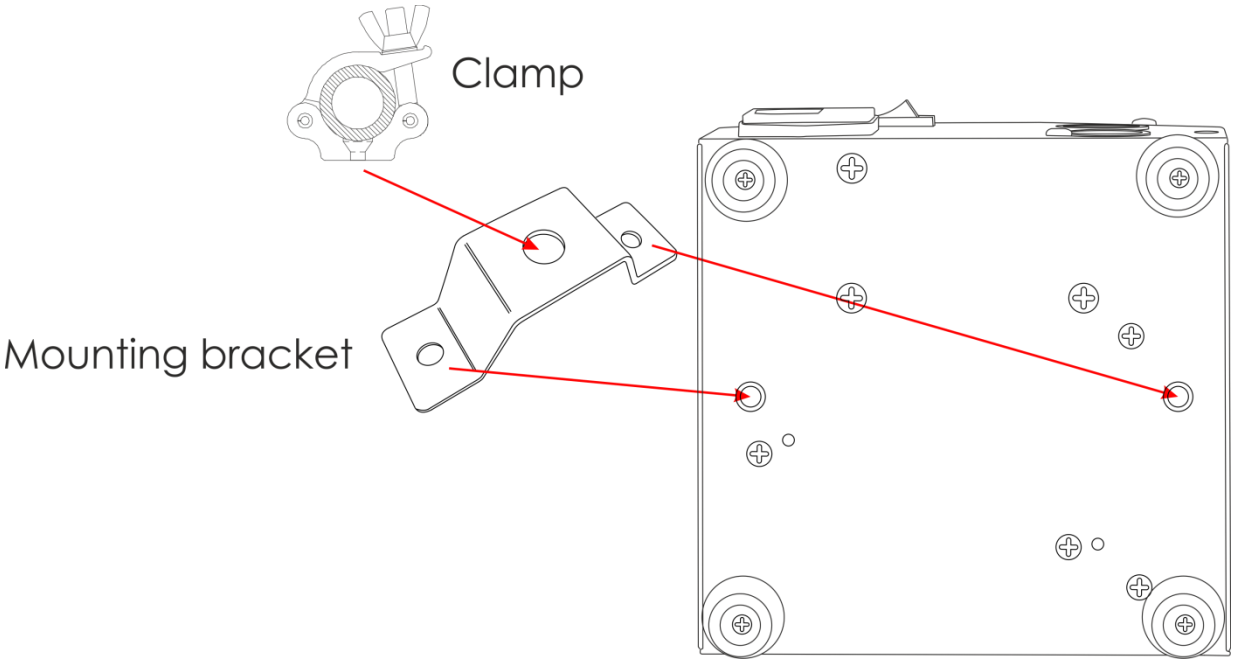

Improper installation can cause serious injuries to people and/or damage of property !

Connection with the mains

Connect the device to the mains with the power plug.
Always check if the right color cable is connected to the right place.

International	EU Cable	UK Cable	US Cable	Pin
L	BROWN	RED	YELLOW/COPPER	PHASE
N	BLUE	BLACK	SILVER	NEUTRAL
⏚	YELLOW/GREEN	GREEN	GREEN	PROTECTIVE GROUND

Make sure that the device is always properly connected to the earth!

Improper installation can cause serious damage to people and property!

Return Procedure

Returned merchandise must be sent prepaid and in the original packing, call tags will not be issued. Package must be clearly labeled with a Return Authorization Number (RMA number). Products returned without an RMA number will be refused. Highlite will not accept the returned goods or any responsibility. Call Highlite 0031-455667723 or mail aftersales@highlite.nl and request an RMA prior to shipping the fixture. Be prepared to provide the model number, serial number and a brief description of the cause for the return. Be sure to properly pack fixture, any shipping damage resulting from inadequate packaging is the customer's responsibility. Highlite reserves the right to use its own discretion to repair or replace product(s). As a suggestion, proper UPS packing or double-boxing is always a safe method to use.

Note: If you are given an RMA number, please include the following information on a piece of paper inside the box:

01) Your name
02) Your address
03) Your phone number
04) A brief description of the symptoms

Claims

The client has the obligation to check the delivered goods immediately upon delivery for any short-comings and/or visible defects, or perform this check after our announcement that the goods are at their disposal. Damage incurred in shipping is the responsibility of the shipper; therefore the damage must be reported to the carrier upon receipt of merchandise.

It is the customer's responsibility to report and submit claims with the shipper in the event that a fixture is damaged due to shipping. Transportation damage has to be reported to us within one day after receipt of the delivery.

Any return shipment has to be made post-paid at all times. Return shipments must be accompanied with a letter defining the reason for return shipment. Non-prepaid return shipments will be refused, unless agreed otherwise in writing.

Complaints against us must be prepared in writing or sent by fax within 10 working days after receipt of the invoice. After this period complaints will not be handled anymore.

Complaints will only then be considered if the client has so far complied with all parts of the agreement, regardless of the agreement from which the obligation is resulting.

Description of the device

Features
The XS-1 is an extreme compact beam moving head, available in white and RGBW. The special optical lens system creates strong and solid beam.

- Mounting of your XS-1 is easy with only one bracket
- Strong narrow RGBW beam
- Compact housing
- Input Voltage: 100-240VAC, 60/50Hz
- Power consumption: 25W max. at full output
- Beam Angle: 3°
- Light Source: 1x10W RGBW
- On-Board: Auto, Sound control & Master/Slave
- Control Protocol: DMX512
- 9 or 16 DMX Channels
- Display: 4 digits LED
- Optical system
- Dimmer: 0-100%
- Strobe: 0-15Hz
- Pan: 540°
- Tilt: 270°
- Pan/Tilt resolution: 8/16 bit
- Special: Pan/Tilt reverse
- Color: Black, Rubber paint
- Metal & Flame-retardant plastic housing
- Data Connection: 3-pin DMX signal connector IN/OUT
- Power Connection: IEC input
- Fuse F1AL/250V
- Dimensions: 125 x 125 x 236 mm (LxWxH)
- Weight: 2 kg

Overview

Fig. 01

01) LCD display
02) Lens

Backside

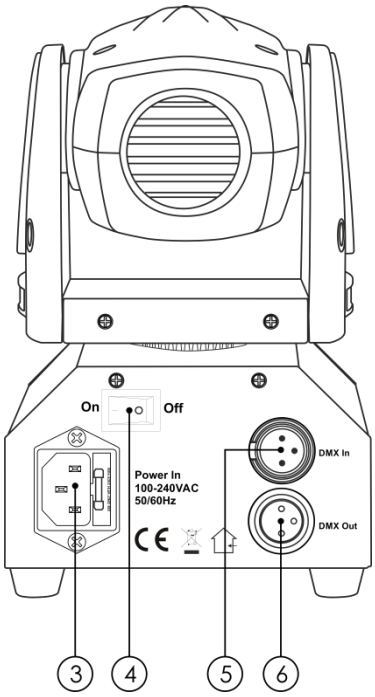

Fig. 02

03) IEC Power connector 100-240V (IN) + Fuse F1AL/250V
04) ON/OFF
05) 3-pin DMX signal connector IN
06) 3-pin DMX signal connector OUT

Installation

Remove all packing materials from the XS-1 RGBW. Check that all foam and plastic padding is removed. Connect all cables.
Do not supply power before the whole system is set up and connected properly.
Always disconnect from electric mains power supply before cleaning or servicing.
Damages caused by non-observance are not subject to warranty.

Set Up and Operation

Follow the directions below, as they pertain to your preferred operation mode.
Before plugging the unit in, always make sure that the power supply matches the product specification voltage. Do not attempt to operate a 120V specification product on 230V power, or vice versa.

Control Modes

There are 5 modes:

- Stand-alone (Built-in programs)
- Stand-alone (Manual)
- Sound-controlled mode
- Master/Slave mode
- DMX512 (9 or 16 channels)

One XS-1 RGBW (Built-in Programs and Manual)

01) Fasten the effect light to a firm trussing. Leave at least 0,5 meter on all sides for air circulation.
02) Plug the end of the electric mains power cord into a proper electric power supply socket.
03) When the XS-1 RGBW is not connected with a DMX-cable, it functions as a stand-alone device. Please, see page 15 and 17 for more information about the built-in programs and Manual Mode..

One XS-1 RGBW (Sound-controlled)

01) Fasten the effect light to a firm trussing. Leave at least 0,5 meter on all sides for air circulation.
02) Plug the end of the electric mains power cord into a proper electric power supply socket.
03) Turn on the music. If the device is set to sound-control, then the XS-1 RGBW will react to the music beats. Please, see page 15 for more information about the sound control options.

Multiple XS-1 moving heads (Master/Slave control)

01) Fasten the effect light to a firm trussing. Leave at least 0,5 meter on all sides for air circulation.
02) Always use a safety cable (ordercode 70140 / 70141).
03) Use a 3-pin XLR cable to connect the XS-1 moving heads.
04) Plug the end of the electric mains power cord into a proper electric power supply socket.
The pins:

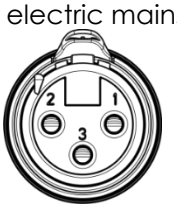

01) Earth
02) Signal (-)
03) Signal (+)

05) Link the units as shown in (Fig.03). Connect a DMX signal cable from the first unit's DMX "out" socket to the second unit's "in" socket. Repeat this process to link the second, third, and fourth units. You can use the same functions on the master device as described on page 15 and 17 (Auto, manual or Sound). This means on the master device you can set your desired operation Mode and all slave devices will react the same as the master device.

Multiple XS-1 moving heads (Master/Slave control)

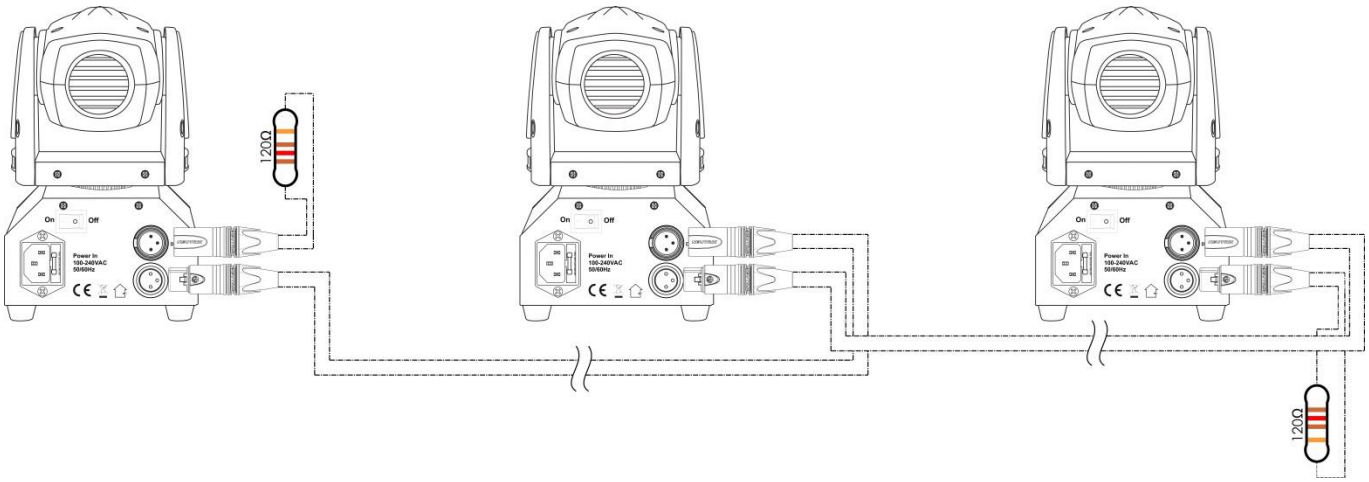

Fig. 03

Multiple XS-1 moving heads (DMX Control)

01) Fasten the effect light onto firm trussing. Leave at least 0,5 meter on all sides for air circulation.
02) Always use a safety cable (ordercode 70140 / 70141).
03) Plug the end of the electric mains power cord into a proper electric power supply socket.
04) Use a 3-pin XLR cable to connect the XS-1 moving heads and other devices.

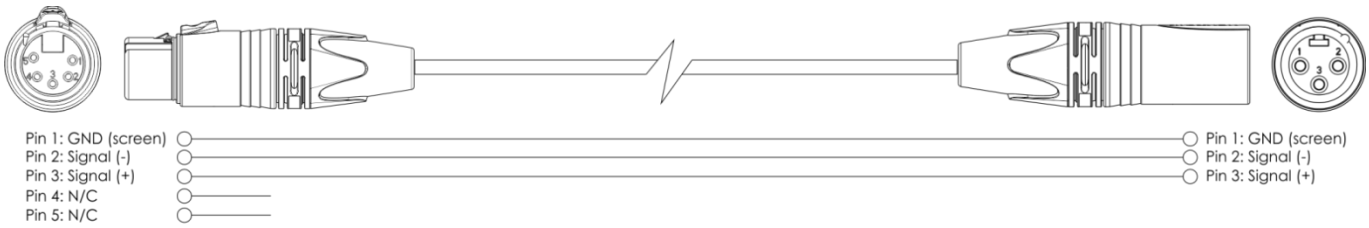

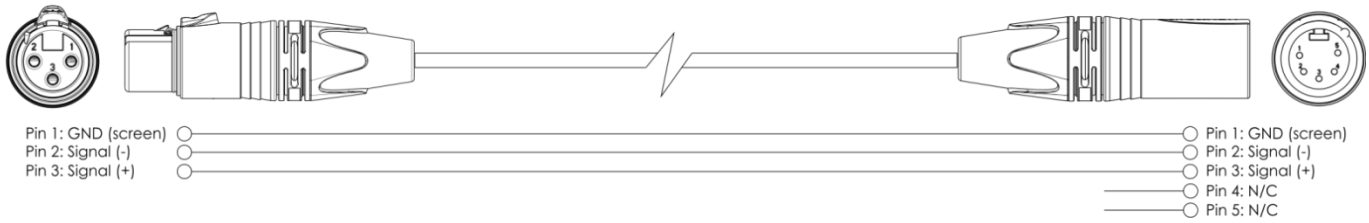

05) Link the units as shown in (Fig.04), Connect a DMX signal cable from the first unit's DMX "out" socket to the second unit's "in" socket. Repeat this process to link the second, third, and fourth units.
06) Supply electric power: Plug electric mains power cords into each unit's IEC socket, then plug the other end of the mains power cord into proper electric power supply sockets, starting with the first unit. Do not supply power before the whole system is set up and connected properly.

Multiple XS-1 moving heads DMX Set Up

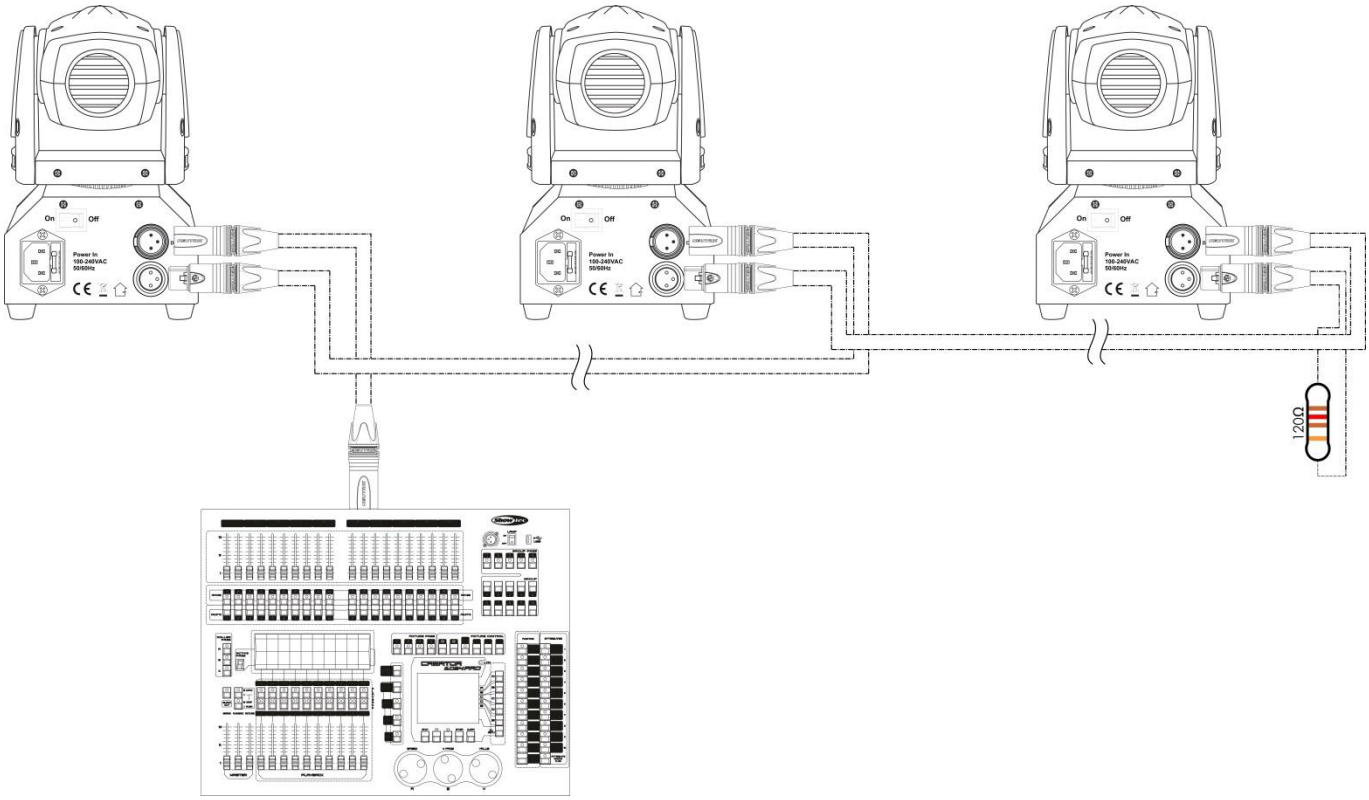

Fig. 04

Note : Link all cables before connecting electric power

Fixture Linking

You will need a serial data link to run light shows of one or more fixtures using a DMX-512 controller or to run synchronized shows of two or more fixtures set to a master/slave operating mode. The combined number of channels required by all the fixtures on a serial data link determines the number of fixtures the data link can support.

Important: Fixtures on a serial data link must be daisy-chained in a single line. To comply with the EIA-485 standard, no more than 30 devices should be connected on one data link. Connecting more than 30 fixtures on one serial data link without the use of a DMX optically isolated splitter may result in deterioration of the digital DMX signal.

Maximum recommended DMX data link distance: 100 meters
Maximum recommended number of fixtures on a DMX data link: 30 fixtures

Data Cabling

To link fixtures together, you must obtain data cables. You can purchase DAP Audio certified DMX cables directly from a dealer/distributor or construct your own cable. If you choose to create your own cable, please use data-grade cables that can carry a high quality signal and are less prone to electromagnetic interference.

DAP Audio DMX Data Cables

- DAP Audio Basic microphone cable for allround use. bal. XLR/M 3-pin > XLR/F 3-pin. **Ordercode** FL01150 (1,5 m), FL013 (3 m), FL016 (6 m), FL0110 (10 m), FL0115 (15 m), FL0120 (20 m).
- DAP Audio X-type data cable XLR/M 3-pin > XLR/F 3-pin. **Ordercode** FLX0175 (0,75 m), FLX01150 (1,5 m), FLX013 (3 m), FLX016 (6 m), FLX0110 (10 m).
- DAP Audio cable for the demanding user with exceptional audio-qualities and connector made by Neutrik®. **Ordercode** FL71150 (1,5 m), FL713 (3 m), FL716 (6 m), FL7110 (10 m).
- DAP Audio cable for the demanding user with exceptional audio-qualities and connector made by Neutrik®. **Ordercode** FL7275 (0,75 m), FL72150 (1,5 m), FL723 (3 m), FL726 (6 m), FL7210 (10 m).
- DAP Audio 110 Ohm cable with digital signal transmission. **Ordercode** FL0975 (0,75 m), FL09150 (1,5 m), FL093 (3 m), FL096 (6 m), FL0910 (10 m), FL0915 (15 m), FL0920 (20 m).

Control Panel

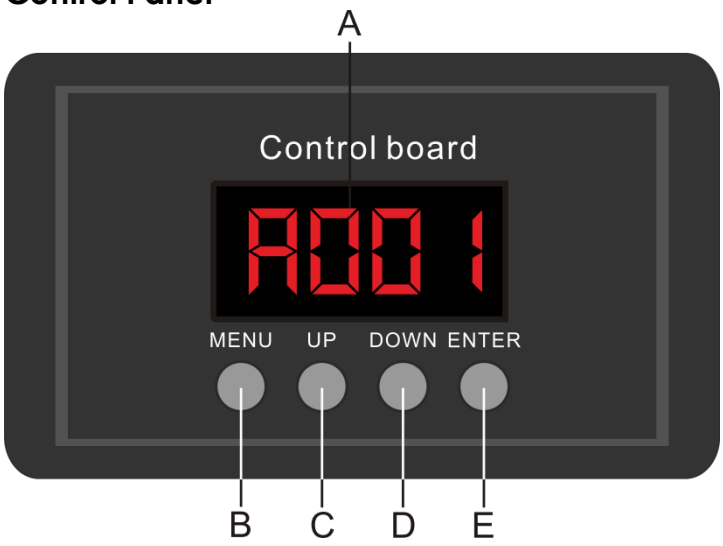

A) LCD Display
B) MENU button
C) Up Button
D) Down Button
E) Enter Button

Fig. 05

Control Mode

The fixtures are individually addressed on a data-link and connected to the controller.
The fixtures respond to the DMX signal from the controller. (When you select the DMX address and save it, the controller will display the saved DMX address the next time.)

DMX Addressing

The control panel on the front side of the base allows you to assign the DMX fixture address, which is the first channel from which the XS-1 moving head will respond to the controller.
Please note when you use the controller, the unit has **16** channels.
When using multiple XS-1 moving heads, make sure you set the DMX addresses right.
Therefore, the DMX address of the first XS-1 moving head should be **1(A001)**; the DMX address of the second XS-1 moving head should be **1+16=17 (A017**); the DMX address of the third XS-1 moving head should be **17+16=33 (A033)**, etc.
Please, be sure that you don't have any overlapping channels in order to control each XS-1 moving head correctly.
If two or more XS-1 moving heads are addressed similarly, they will work similarly.

Controlling:

After having addressed all XS-1 fixtures, you may now start operating these via your lighting controller.
Note: After switching on, the XS-1 moving head will automatically detect whether DMX 512 data is received or not. If there is no data received at the DMX-input, the "**LED**" on the control panel will not flash.
The problem may be:

- The XLR cable from the controller is not connected with the input of the XS-1 moving head.
- The controller is switched off or defective, the cable or connector is detective, or the signal wires are swapped in the input connector.

Note: It's necessary to insert a XLR termination plug (with 120 Ohm) in the last fixture in order to ensure proper transmission on the DMX data link.

Menu Overview

Main Menu Options

Addr	DMX address
ChAn	Channel Mode
MASL	Master/Slave
Auto	Auto
SoUn	Sound-controlled
SEnS	Sound Sensitivity
bLAC	Blackout
LEd	LED Display
d ISP	Display Invert
PAn	Pan Invert
t ILt	Tilt Invert
MAnu	Manual Mode
tESt	Test
hoUr	Hours Used
F IrM	Firmware Version
rSEt	Reset

1. DMX Addressing
With this menu you can set the DMX address.

01) Press the **MENU** button and then the Up / Down buttons, until the display shows Addr.

02) Press the **ENTER** button to open this menu. You can choose 512 different DMX addresses.

03) Use the Up / Down buttons to select the required address from A001 – A512.
04) Once you have set the desired DMX address, press the **ENTER** button to store your DMX address.

2. Channel Mode
With this menu you can set the Channel Mode.

01) Press the **MENU** button and then the Up / Down buttons, until the display shows ChAn.
02) Press the **ENTER** button to open this menu.
Use the UP/DOWN buttons to change the setting from 9CH to 16CH 9Ch – 16Ch.
03) Once you have set the desired Mode, press the **ENTER** button to store your setting.

3. Slave Mode
With this menu you can set the Master or Slave Mode.

01) Press the **MENU** button and then the Up / Down buttons, until the display shows MASL.
02) Press the **ENTER** button to open this menu.
03) Use the UP/DOWN buttons to toggle between the following Auto modes:

MASt Master mode

SL 1 Normal slave mode

SL 2 Mirror slave mode

04) Press the **SETUP** button to store your setting.

4. Auto programs

01) Press the **MENU** button and then the Up / Down buttons, until the display shows Auto.
02) Press the **ENTER** button to open this menu.
03) Use the UP/DOWN buttons to toggle between the auto programs:

Au 0 - Au 12 Auto Program 0 - 12

Soud Sound-controlled auto program

04) Press the **SETUP** button to confirm your choice.

5. Sound control Mode
With this menu you can set the Sound control.

01) Press the **MENU** button and then the Up / Down buttons, until the display shows SoUn.
02) Press the **ENTER** button to open this menu.
03) Use the UP/DOWN buttons to change the setting from On to Off -on- – -OFF.
04) Once you have set the desired Mode, press the **ENTER** button to store your setting.
05) If the device has been set to Off, the device will not react to the beat of the music.
06) If the device has been set to On, the device will react to the beat of the music.

6. Sensitivity Mode

With this menu you can set the Sensitivity control.

01) Press the **MENU** button and then the Up / Down buttons, until the display shows SEnS.
02) Press the **ENTER** button to open this menu.
03) You can choose 100 different Audio Sensitivity levels 0 – 100.
04) Press the **SETUP** button to confirm your choice.

7. Blackout/DMX Fail Mode

With this menu you can set the device's behaviour in case of a DMX signal error.

01) Press the **MENU** button and then the Up / Down buttons, until the display shows bLAC.
02) Press the **ENTER** button to open this menu.
03) If the device has been set to No and the DMX signal is lost, the device will not blackout, it will automatically start its auto program.
04) If the device has been set to Yes and the DMX signal is lost, the device will blackout. The device will not remember its last received DMX signal. Do not use this option when the device is used as a stand-alone device (i.e. without a DMX signal and without an XLR cable). The moving head will remain in a blackout state, no matter what setting you have set in one of the stand-alone modes.
05) Press the **ENTER** button to confirm your choice.

8. Display Mode

With this menu you can set the Display control.

01) Press the **MENU** button and then the Up / Down buttons, until the display shows LEd.
02) Press the **ENTER** button to open this menu.
03) If the device has been set to ON, the display is always ON.
04) If the device has been set to OFF, the display is OFF after 10 seconds.
05) Press the **SETUP** button to confirm your choice.

9. Display settings

01) Press the **MENU** button and then the Up / Down buttons, until the display shows dISP.
02) Press the **SETUP** button to enter the menu.
03) Press the **UP** and **DOWN** buttons to toggle between:

dISP Normal Display

dSI P Display Invert

04) Press the **SETUP** button to confirm your choice.

10. Pan Invert

01) Press the **MENU** button and then the Up / Down buttons, until the display shows PAn.
02) Press the **SETUP** button to enter the menu.
03) Press the **UP** and **DOWN** buttons to toggle between:

nPAn Normal Pan

I PAn Pan Invert

04) Press the **SETUP** button to confirm your choice.

11. Tilt Invert

05) Press the **MENU** button and then the Up / Down buttons, until the display shows tILt.
06) Press the **SETUP** button to enter the menu.
07) Press the **UP** and **DOWN** buttons to toggle between:

nt IL Normal Tilt

I t IL Tilt Invert

08) Press the **SETUP** button to confirm your choice.

12. Manual control

With this menu you can set the manually set 8 options.

01) Press the **MENU** button and then the Up / Down buttons, until the display shows MAnu.
02) Press the **ENTER** button to open this menu.
03) Press the **UP** and **DOWN** buttons to toggle between:

PAn	ENTER	P 0	–	P255	Pan 000-255
tILt	ENTER	t 0	–	t255	Tilt 000-255
rEd	ENTER	r 0	–	r255	Red 000-255
GrEE	ENTER	G 0	–	G255	Green 000-255
bLuE	ENTER	b 0	–	b255	Blue 000-255
HI tE	ENTER	U 0	–	U255	White 000-255
dIMM	ENTER	d 0	–	d255	Dimmer 000-255
Stro	ENTER	S 0	–	S255	Strobe 000-255

04) Press the **SETUP** button to confirm your choice.

13. Test

With this menu you can test your XS-1.

01) Press the **MENU** button and then the Up / Down buttons, until the display shows tESt.
02) Press the **ENTER** button to open this menu.
03) The XS-1 will now run the automatic test of all the available features.

14. Lifetime

With this menu you can view how long your XS-1 has been used.

01) Press the **MENU** button and then the Up / Down buttons, until the display shows hoUr.
02) Press the **ENTER** button to open this menu.
03) The XS-1 will now show its operating time.

15. Firmware Version

With this menu you can view which version your XS-1 has.

01) Press the **MENU** button and then the Up / Down buttons, until the display shows FIrM.
02) Press the **ENTER** button to open this menu.
03) The XS-1 will now show its currently installed software version u104 .

16. Reset

With this menu you can reset your XS-1 has.

01) Press the **MENU** button and then the Up / Down buttons, until the display shows rSEt.
02) Press the **ENTER** button to open this menu.
03) Use the UP/DOWN buttons to change the setting from No to Yes no – YES.
04) If the device has been set to No, the device will not reset.
05) If the device has been set to Yes, the device will reset.
06) Press the **SETUP** button to confirm your choice.

DMX Channels

9 Channels

Channel 1 – Horizontal movement (Pan)
Move the slider up and down, in order to move head horizontally (PAN).
Gradual head adjustment by moving the slider from one end to the other (0-255).
The head can be turned by 540° and stopped in any position.

Channel 2 – Vertical movement (Tilt)
Move the slider up in order to move head vertically (TILT).
Gradual head adjustment by moving the slider from one end to the other (0-255).
The head can be turned by 270° and stopped in any position.

Channel 3 – Shutter/Strobe

0-7	Shutter closed
8-15	Shutter open
16-131	Strobe effect, from slow to fast
132-139	Shutter open
140-181	Fast Close to slow Open, from slow to fast
182-189	Shutter open
190-231	Slow Close to Fast Open, slow Open, from slow to fast
232-239	Shutter open
240-247	Random shutters are on or off, from long to short intervals
248-255	Shutter open

Channel 4 – Red

0-255	Red color intensity, from OFF to full ON

Channel 5 – Green

0-255	Green color intensity, from OFF to full ON

Channel 6 – Blue

0-255	Blue color intensity, from OFF to full ON

Channel 7 – White

0-255	White color intensity, from OFF to full ON

Channel 8 – Dimmer

0-255	0-100% dimmer

Channel 9 – Channel Functions

0-69	Not used
70-79	Enable Pan/tilt blackout (after 5 seconds)
80-89	Disable Pan/tilt blackout (after 5 seconds)
90-199	No Function
200-209	Reset All (after 5 seconds)
210-249	No Function
250-255	Sound-controlled

16 Channels

Channel 1 – Horizontal movement (Pan)
Push the slider up, in order to move head horizontally (PAN).
Gradual head adjustment from one end of the slider to the other (0-255, 128-center).
The head can be turned by 540° and stopped at any position you wish.

Channel 2 – Pan fine 16 bit

Channel 3 – Vertical movement (Tilt)
Push the slider, up in order to move head vertically (TILT).
Gradual head adjustment from one end of the slider to the other (0-255, 128-center).
The head can be turned by 180° and stopped at any position you wish.

Channel 4 – Tilt fine 16 bit

Channel 5 – Pan / Tilt speed

0-255	From Max Speed (0) to Min. Speed (255)

Channel 6 – Pan/Tilt Macro

0-15	Not used
16-35	Color Macro 1
36-55	Color Macro 2
56-75	Color Macro 3
76-95	Color Macro 4
96-115	Color Macro 5
116-135	Color Macro 6
136-155	Color Macro 7
156-175	Color Macro 8
176-195	Color Macro 9
196-215	Color Macro 10
216-235	Color Macro 11
236-255	Color Macro 12

Channel 7 – Pan/Tilt Macro Speed

0-255	From fast to slow

Channel 8 – Channel Functions

0-69	Not used
70-79	Enable Pan/tilt blackout (after 5 seconds)
80-89	Disable Pan/tilt blackout (after 5 seconds)
90-199	No Function
200-209	Reset All (after 5 seconds)
210-249	No Function
250-255	Sound-controlled

Channel 9 – Dimmer

0-255	0-100% dimmer

Channel 10 – Shutter/Strobe

0-7	Shutter closed
8-15	Shutter open
16-131	Strobe effect, from slow to fast
132-139	Shutter open
140-181	Fast Close to slow Open, from slow to fast
182-189	Shutter open
190-231	Slow Close to Fast Open, slow Open, from slow to fast

232-239	Shutter open
240-247	Random shutters are on or off, from long to short intervals
248-255	Shutter open

Channel 11 – Red

0-255	Red color intensity, from OFF to full ON

Channel 12– Green

0-255	Green color intensity, from OFF to full ON

Channel 13 – Blue

0-255	Blue color intensity, from OFF to full ON

Channel 14 – White

0-255	White color intensity, from OFF to full ON

Channel 15 – Color Programs

0-7	No Function
8-127	Static Colors, gradual change
128-191	Built-in Color Program 1 (color jump)
192-255	Built-in Color Program 2 (color fade)

Channel 16 – Speed (CH15 must be set between 128-255)

0-255	From slow to fast

Maintenance

The operator has to make sure that safety-relating and machine-technical installations are to be inspected by an expert after every year in the course of an acceptance test.
The operator has to make sure that safety-related and machine-technical installations are to be inspected by a skilled person once a year.

The following points have to be considered during the inspection:

01) All screws used for installing the device or parts of the device have to be tightly connected and must not be corroded.
02) There may not be any deformations on housings, fixations and installation spots.
03) Mechanically moving parts like axles, eyes and others may not show any traces of wearing.
04) The electric power supply cables must not show any damages or material fatigue.

The Showtec XS-1 RGBW requires almost no maintenance. However, you should keep the unit clean. Otherwise, the fixture's light-output will be significantly reduced. Disconnect the mains power supply, and then wipe the cover with a damp cloth. Do not immerse in liquid. Wipe lens clean with glass cleaner and a soft cloth. Do not use alcohol or solvents.
The front lens will require weekly cleaning, as smoke-fluid tends to build up residues, reducing the light-output very quickly.
The cooling-fans, color-wheel, the gobo wheel, the gobos and the internal lenses should be cleaned monthly, with a soft brush.
Please clean internal components once a year with a light brush and vacuum cleaner.
Keep connections clean. Disconnect electric power, and then wipe the DMX and audio connections with a damp cloth. Make sure connections are thoroughly dry before linking equipment or supplying electric power.

Replacing a Fuse

Power surges, short-circuit or inappropriate electrical power supply may cause a fuse to burn out.
If the fuse burns out, the product will not function whatsoever. If this happens, follow the directions below:
Power surges, short-circuit or inappropriate electrical power supply may cause a fuse to burn out. If the fuse burns out, the product will not function whatsoever. If this happens, follow the directions below.

01) Unplug the unit from electric power source.
02) Insert a flat-head screwdriver into a slot in the fuse cover. Gently pry up the fuse cover. The fuse will come out.
03) Remove the used fuse. If brown or unclear, it is burned out.
04) Insert the replacement fuse into the holder where the old fuse was. Reinsert the fuse cover. Be sure to use a fuse of the same type and specification. See the product specification label for details.

Troubleshooting

No Light

This troubleshooting guide is meant to help solve simple problems. If a problem occurs, carry out the steps below in sequence until a solution is found. Once the unit operates properly, do not carry out following steps.
If the light effect does not operate properly, refer servicing to a technician.
Response: Suspect three potential problem areas as: the power supply, the LEDs, the fuse.

01) Power supply. Check that the unit is plugged into an appropriate power supply.
02) The LED. Return the XS-1 RGBW to your Showtec dealer.
03) The fuse. Replace the fuse. See page 21 for replacing the fuse.
04) If all of the above appears to be O.K., plug the unit in again.
05) If you are unable to determine the cause of the problem, do not open the Galactic, as this may damage the unit and the warranty will become void.
06) Return the device to your Showtec dealer.

No Response to DMX

Response: Suspect the DMX cable or connectors, a controller malfunction, a light effect DMX card malfunction.

01) Check the DMX setting. Make sure that DMX addresses are correct.
02) Check the DMX cable: Unplug the unit; change the DMX cable; then reconnect to electrical power. Try your DMX control again.
03) Determine whether the controller or light effect is at fault. Does the controller operate properly with other DMX products? If not, take the controller in for repair. If so, take the DMX cable and the light effect to a qualified technician

See next page for more problem solving.

Problem	Probable cause(s)	Solution
One or more fixtures do not function at all	No power to the fixture	• Check if power is switched on and cables are plugged in
	Primary fuse blown	• Replace fuse
Fixtures reset correctly, but all respond erratically or not at all to the controller	The controller is not connected.	• Connect controller.
	3-pin XLR Out of the controller does not match XLR Out of the first fixture on the link (i.e. signal is reversed)	• Install a phase reversing cable between the controller and the first fixture on the link
Fixtures reset correctly, but some respond erratically or not at all to the controller	Poor data quality	• Check data quality. If much lower than 100 percent, the problem may be a bad data link connection, poor quality or broken cables, missing termination plug, or a defective fixture disturbing the link
	Bad data link connection	• Inspect connections and cables. Correct poor connections. Repair or replace damaged cables
	Data link not terminated with 120 Ohm termination plug	• Insert termination plug in output jack of the last fixture on the link
	Incorrect addressing of the fixtures	• Check address setting
	One of the fixtures is defective and disturbs data transmission on the link	• Bypass one fixture at a time until normal operation is restored: unplug both connectors and connect them directly together. • Have the defective fixture serviced by a qualified technician
	3-pin XLR Out on the fixtures does not match (pins 2 and 3 reversed)	• Install a phase-reversing cable between the fixtures or swap pin 2 and 3 in the fixture that behaves erratically
Shutter closes suddenly	The color wheel, gobowheel or a gobo has lost its index position and the fixture is resetting the effect	• Contact a technician for servicing if the problem persists
No light or lamp cuts out intermittently	Fixture is too hot	• Allow the fixture to cool down • Clean the fan • Make sure air vents in control panel and the front lens are not blocked • Turn up the air conditioning
	LEDs damaged	• Disconnect the fixture and return it to your dealer
	The power supply settings do not match local AC voltage and frequency	• Disconnect fixture. Check settings and correct if necessary

Product Specifications

Model:	Showtec XS-1 RGBW
Input Voltage:	100~240VAC 50/60Hz
Power consumption:	25W max. at full output
Fuse:	F1AL/250V
Dimensions:	125 x 125 x 236 mm (LxWxH)
Weight:	2 Kg
Operating and Programming:	
Signal pin OUT:	Pin 1 (earth), pin 2 (-), pin 3 (+)
Set Up and Addressing:	LCD control panel
Pan/Tilt resolution:	8/16 bit
DMX Channels:	9 or 16
IP Rating:	IP 20
Signal input:	3-pin XLR male
Signal output:	3-pin XLR female
Electro-mechanical effects:	
Mounting of your XS-1 is easy with only one bracket	
Strong narrow RGBW beam	
Compact housing	
Beam Angle: 3°	
DMX-control via standard DMX-controller	
Light Source: 1x10W RGBW	
On-Board: Auto, Sound control & Master/Slave	
Control Protocol: DMX512	
Display: 4 digits LED	
Optical system	
Dimmer: 0-100%	
Strobe: 0-15Hz	
Pan: 540°	
Tilt: 270°	
Special: Pan/Tilt reverse	
Color: Black, Rubber paint	
Metal & Flame-retardant plastic housing	
Working temperature:	<40°C
Max. ambient temperature t_a:	40°C
Max. housing temperature t_B:	80°C
Minimum distance:	
Minimum distance from flammable surfaces:	0,5 m
Minimum distance to lighted object:	1 m

Design and product specifications are subject to change without prior notice.

CE

Website: www.Showtec.info
Email: service@highlite.nl

Dimensions

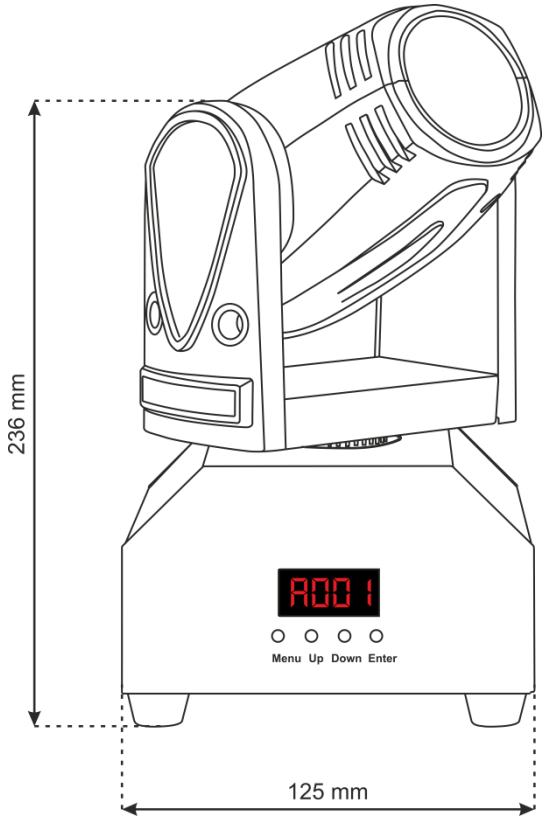

Notes

©2015 Showtec