High Speed Super Low Power SRAM

8K-Word By 8 Bit

WS6264

■ GENERAL DESCRIPTION

The WS6264 is a high performance, high speed and super low power CMOS Static Random Access Memory organized as 8,192 words by 8bits and operates from a single 4.5V to 5.5V supply voltage. Advanced CMOS technology and circuit techniques provide both high speed, super low power features and maximum access time of 70ns in 5.0V operation. Easy memory expansion is provided by using two chip enable inputs (/CE1, CE2) and active LOW output enable (/OE).

The WS6264 has an automatic power down feature, reducing the power consumption significantly when chip is deselected. The WS6264 is available in JEDEC standard 28-pin SOP(300 mil) and PDIP (600 mil) packages.

■ FEATURES

- Operation voltage : 4.5 ~ 5.5V
- Ultra low power consumption:
  Operating current 1mA@1MHz & CMOS standby current 1.0uA (Typ.) in Vcc=5.0V
- High speed access time: 70ns.
- Automatic power down when chip is deselected.
- Three state outputs and TTL compatible.
- Data retention supply voltage as low as 2.0V.
- Easy expansion with /CE1, CE2 and /OE options.

■ PRODUCT FAMILY

Product Family	Operating Temp.	Vcc Range	Speed (ns)	Standby Current (Typ.) I_{CCSB1}	Package Type
WS6264LLFP	0~70°C	4.5~5.5V	70	1.0uA	28 SOP
WS6264LLP					28 PDIP
WS6264LLFPI	-40~85°C		70	1.0uA	28 SOP
WS6264LLPI					28 PDIP

■ PIN CONFIGURATIONS

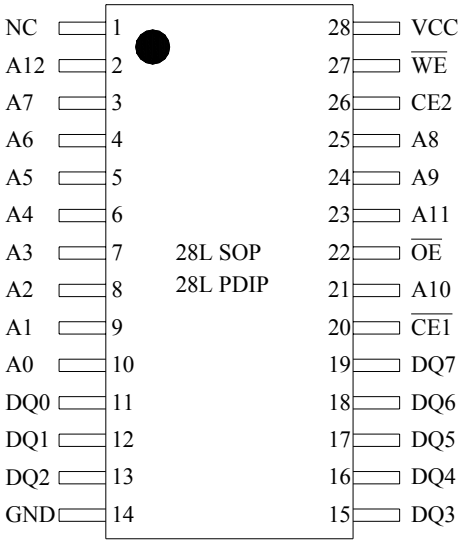

■ FUNCTIONAL BLOCK DIAGRAM

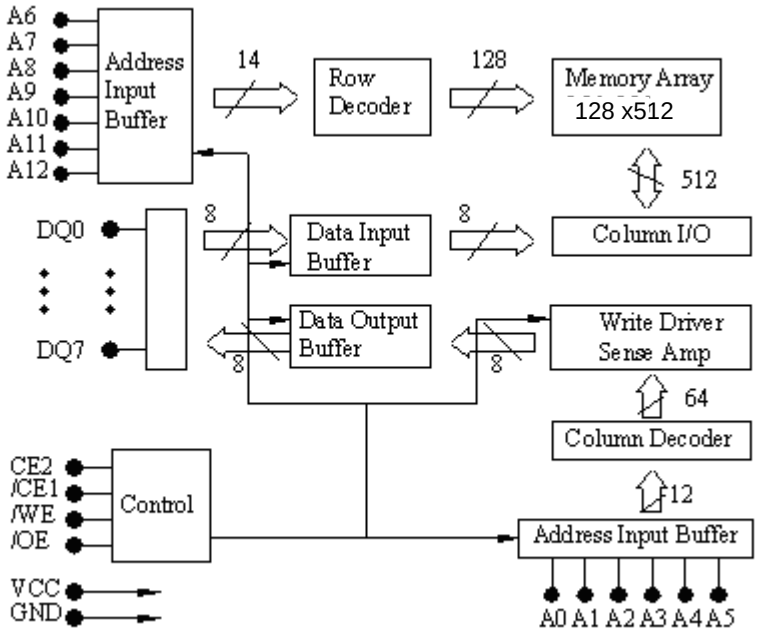

■ PIN DESCRIPTIONS

Name	Type	Function
A0 – A12	Input	Address inputs for selecting one of the 8,192 x 8 bit words in the RAM
/CE1,CE2	Input	/CE1 is active LOW and CE2 is active HIGH. Both chip enables must be active when data read from or write to the device. If either chip enable is not active, the device is deselected and in a standby power down mode. The DQ pins will be in high impedance state when the device is deselected.
/WE	Input	The Write enable input is active LOW. It controls read and write operations. With the chip selected, when /WE is HIGH and /OE is LOW, output data will be present on the DQ pins, when /WE is LOW, the data present on the DQ pins will be written into the selected memory location.
/OE	Input	The output enable input is active LOW. If the output enable is active while the chip is selected and the write enable is inactive, data will be present on the DQ pins and they will be enabled. The DQ pins will be in the high impedance state when /OE is inactive.
DQ0~DQ7	I/O	These 8 bi-directional ports are used to read data from or write data into the RAM.
Vcc	Power	Power Supply
Gnd	Power	Ground
NC		No connection

■ TRUTH TABLE

MODE	/CE1	CE2	/WE	/OE	DQ0~7	Vcc Current
Standby	H	X	X	X	High Z	I_{CCSB}, I_{CCSB1}
	X	L	X	X		
Output Disable	L	H	H	H	High Z	I_{CC}
Read	L	H	H	L	D_{OUT}	I_{CC}
Write	L	H	L	X	D_{IN}	I_{CC}

■ ABSOLUTE MAXIMUM RATINGS(1)

Symbol	Parameter	Rating	Unit
V_{TERM}	Terminal Voltage with Respect to GND	-0.5 to Vcc+0.5	V
T_{BIAS}	Temperature Under Bias	-40 to +125	^{O}C
T_{STG}	Storage Temperature	-65 to +150	^{O}C
P_T	Power Dissipation	1.0	W
I_{OUT}	DC Output Current	50	mA

1. Stresses greater than those listed under ABSOLUTE MAXIMUM RATINGS may cause permanent damage to the device. This is a stress rating only and functional operation of the device at these or any other conditions above those indicated in the operational sections of this specification is not implied. Exposure to absolute maximum rating conditions for extended periods may affect reliability.

■ OPERATING RANGE

Range	Ambient Temperature	Vcc
Commercial	0~70°C	4.5 ~ 5.5V
Industrial	-40~85°C	4.5 ~ 5.5V

■ CAPACITANCE(1)(TA=25℃,f=1.0MHz)

Symbol	Parameter	Conduction	MAX.	Unit
C_{IN}	Input Capacitance	VIN=0V	8	pF
C_{DQ}	Input/Output Capacitance	VDI/O=0V	10	pF

1.This parameter is guaranteed, and not 100% tested.

■ DC ELECTRICAL CHARACTERISTICS (TA = 0° ~70°C, Vcc = 5.0V)

Name	Parameter	Test Condition	MIN	TYP(1)	MAX	Unit
V_{IL}	Guaranteed Input Low Voltage (2)	Vcc=5.0V	-0.5		0.8	V
V_{IH}	Guaranteed Input High Voltage (2)	Vcc=5.0V	2.2		Vcc+0.5	V
I_{IL}	Input Leakage Current	V_{CC}=MAX, V_{IN}=0 to V_{CC}	-1		1	uA
I_{OL}	Output Leakage Current	V_{CC}=MAX, /CE1=V_{Ih}, or CE2= $V_{IL,}$ or /OE=V_{Ih} ,or /WE= V_{IL} V_{IO}=0V to V_{CC}	-1		1	uA
V_{OL}	Output Low Voltage	V_{CC}=MAX, I_{OL} = 1mA			0.4	V
V_{OH}	Output High Voltage	V_{CC}=MIN, I_{OH} = -1mA	2.4			V
I_{CC}	Operating Power Supply Current	/CE1=V_{IL}, I_{DQ}=0mA, F=F_{MAX} =1/ t_{RC}			30	mA
I_{CCSB}	TTL Standby Supply	/CE1=V_{IH}, I_{DQ}=0mA,			10	mA
I_{CCSB1}	CMOS Standby Current	/CE1≧V_{CC}-0.2V, CE2= 0.2V, V_{IN}≧V_{CC}-0.2V or V_{IN}≦0.2V,		1	10	uA

1. Typical characteristics are at TA = 25°C.
2. These are absolute values with respect to device ground and all overshoots due to system or tester notice are included.

■ DATA RETENTION CHARACTERISTICS (TA = 0° ~70°C, Vcc = 5.0V)

Name	Parameter	Test Condition	MIN	TYP(1)	MAX	Unit
V_{DR}	V_{CC} for Data Retention	/CE1 ≧ V_{CC}-0.2V, V_{IN} ≧ V_{CC}-0.2V or V_{IN}≦0.2V	2.0			V
I_{CCDR}	Data Retention Current	/CE1≧V_{CC}-0.2V, V_{IN}≧ V_{CC}-0.2V or V_{IN}≦0.2V		0.5	5	**uA**
T_{CDR}	Chip Deselect to Data Retention Time	Refer to Retention Waveform	0			ns
t_R	Operation Recovery Time		t_{RC} (2)			ns

1.TA = 25°C

2. t_{RC}= Read Cycle Time

■ LOW Vcc DATA RETENTION WAVEFORM(1) (/CE1 Controlled)

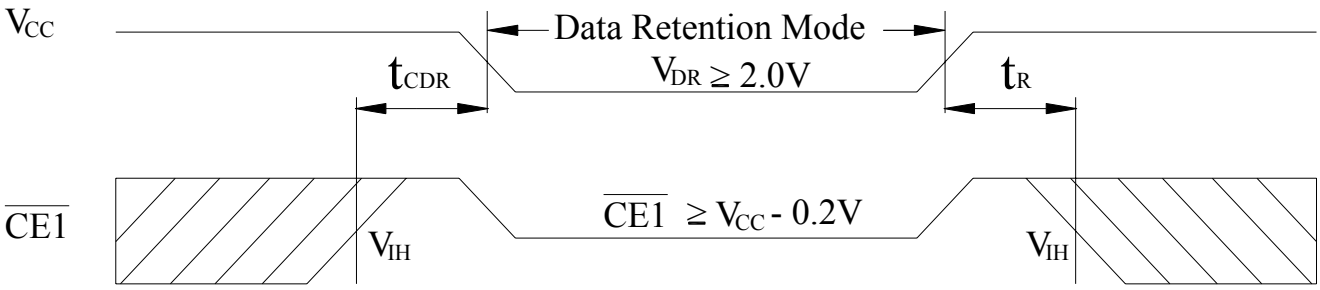

■ LOW Vcc DATA RETENTION WAVEFORM (2) (CE2 Controlled)

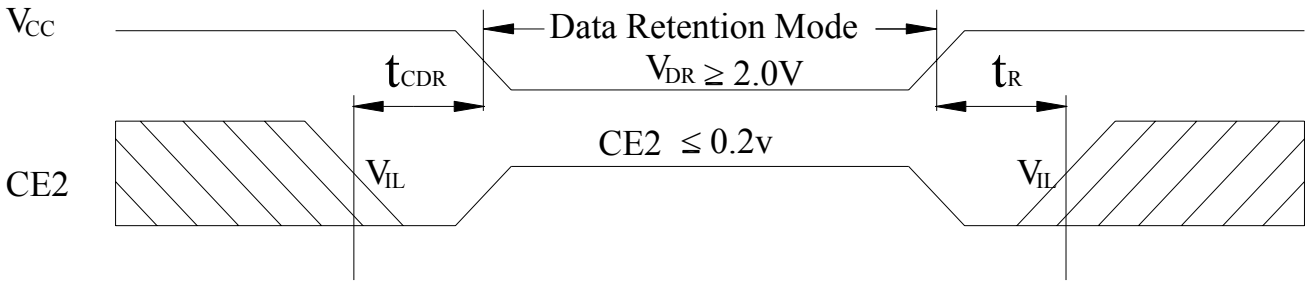

■ AC TEST CONDITIONS

Input Pulse Levels	Vcc/0V
Input Rise and Fall Times	5ns
Input and Output Timing Reference Level	0.5Vcc
Output Load	See FIGURE 1A and 1B

■ KEY TO SWITCHING WAVEFORMS

WAVEFORMS	INPUTS	OUTPUTS
	MUST BE STEADY	MUST BE STEADY
	MAY CHANGE FROM H TO L	WILL BE CHANGE FROM H TO L
	MAY CHANGE FROM L TO H	WILL BE CHANGE FROM L TO H
	DON'T CARE ANY CHANGE PERMITTED	CHANGE STATE UNKNOWN
	DOES NOT APPLY	CENTER LINE IS HIGH IMPEDANCE OFF STATE

■ AC TEST LOADS AND WAVEFORMS

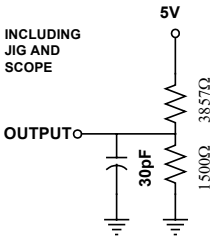

FIGURE 1A

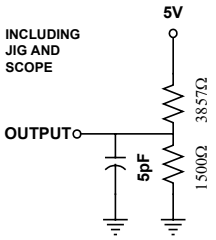

FIGURE 1B

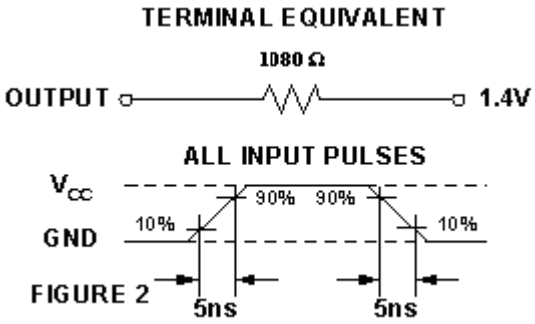

FIGURE 2

■ AC ELECTRICAL CHARACTERISTICS (0℃~70℃ ; Vcc=5V)

< READ CYCLE >

JEDEC Name	Symbol	Description	-70		Unit
			MIN	MAX	
t_{AVAX}	t_{RC}	Read Cycle Time	70		ns
t_{AVQV}	t_{AA}	Address Access Time		70	ns
t_{ELQV}	t_{ACE}	Chip Select Access Time		70	ns
t_{GLQV}	t_{OE}	Output Enable to Output Valid		40	ns
t_{ELQX}	$t_{CLZ}^{(5)}$	Chip Select to Output Low Z	10		ns
t_{GLQX}	$t_{OLZ}^{(5)}$	Output Enable to Output in Low Z	5		ns
t_{EHQZ}	$t_{CHZ}^{(5)}$	Chip Deselect to Output in High Z	0	35	ns
t_{GHQZ}	$t_{OHZ}^{(5)}$	Output Disable to Output in High Z	0	30	ns
t_{AXOX}	t_{OH}	Address Change to Out Disable	10		ns

■ SWITCHING WAVEFORMS (READ CYCLE)

READ CYCLE 1 [1,2,4]

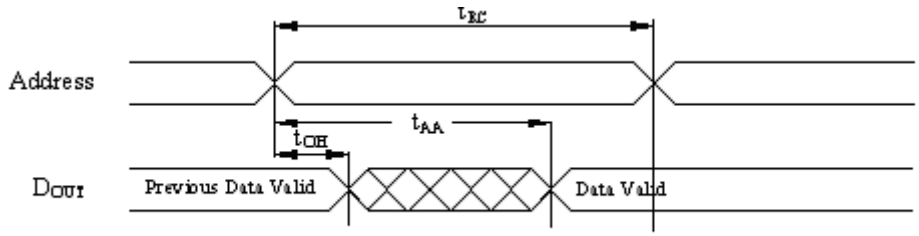

READ CYCLE 2 [1,3,4]

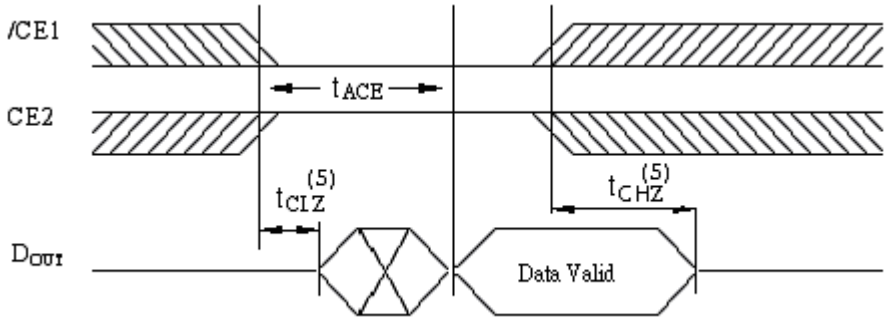

READ CYCLE 3 [1,4]

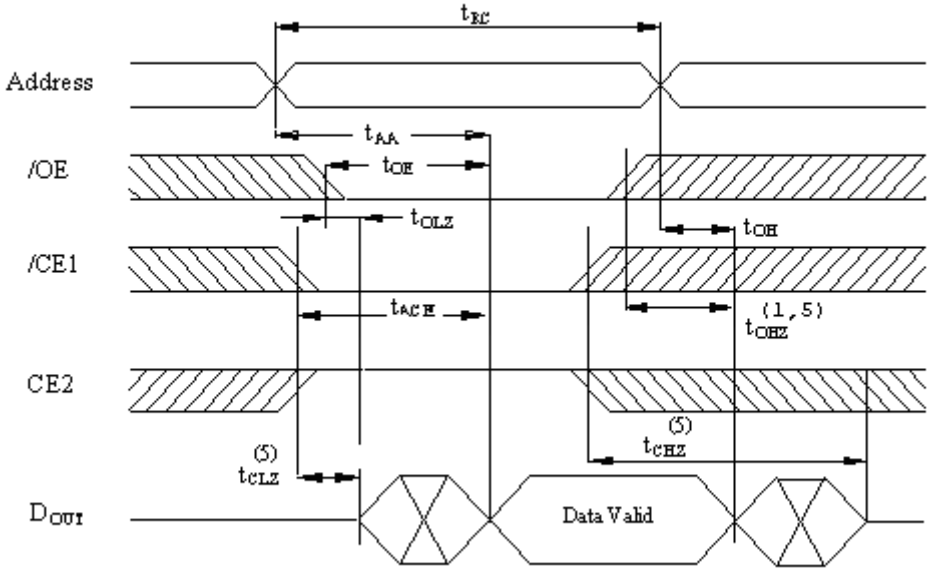

NOTES:

1. /WE is high in read Cycle.
2. Device is continuously selected when /CE1 = V_{IL} and CE2=$V_{IH.}$
3. Address valid prior to or coincident with /CE1 transition low and /or CE2 transition high.
4. /OE = V_{IL}.
5. Transition is measured ±500mV from steady state with C_L = 5pF as shown in Figure 1B. The parameter is guaranteed but not 100% tested.

■ AC ELECTRICAL CHARACTERISTICS (0℃~70℃ ; Vcc=5V)

< WRITE CYCLE >

JEDEC Name	Symbol	Description	-70		Unit
			MIN	MAX	
t_{AVAX}	t_{WC}	Write Cycle Time	70		ns
t_{E1LWH}	t_{CW}	Chip Select to End of Write	70		ns
t_{AVWL}	t_{AS}	Address Setup Time	0		ns
t_{AVWH}	t_{AW}	Address Valid to End of Write	70		ns
t_{WLWH}	t_{WP}	Write Pulse Width	50		ns
t_{WHAX}	t_{WR}	Write Recovery Time	0		ns
t_{WLQZ}	$t_{WHZ}^{(10)}$	Write to Output in High Z		35	ns
t_{DVWH}	t_{DW}	Data to Write Time Overlap	40		ns
t_{WHDX}	t_{DH}	Data Hold for Write End	0		ns
t_{GHQZ}	$t_{OHZ}^{(10)}$	Output Disable to Output in High Z	0	30	ns
t_{WHOX}	$t_{OW}^{(10)}$	End of Write to Output Active	5		ns

■ SWITCHING WAVEFORMS (WRITE CYCLE)

WRITE CYCLE1 (Write Enable Controlled)

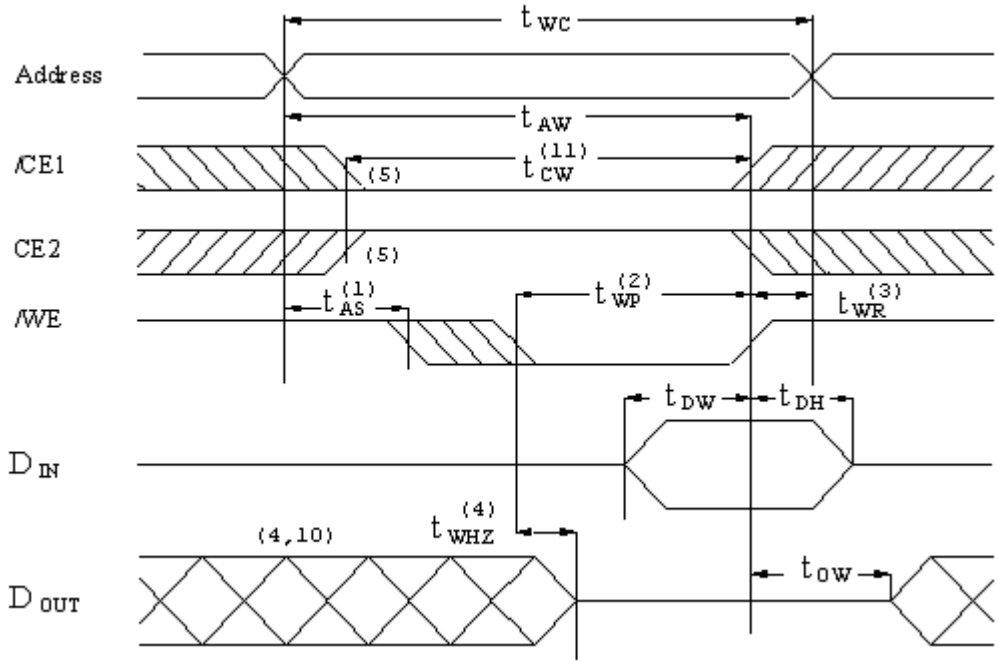

WRITE CYCLE2 (Chip Enable Controlled)

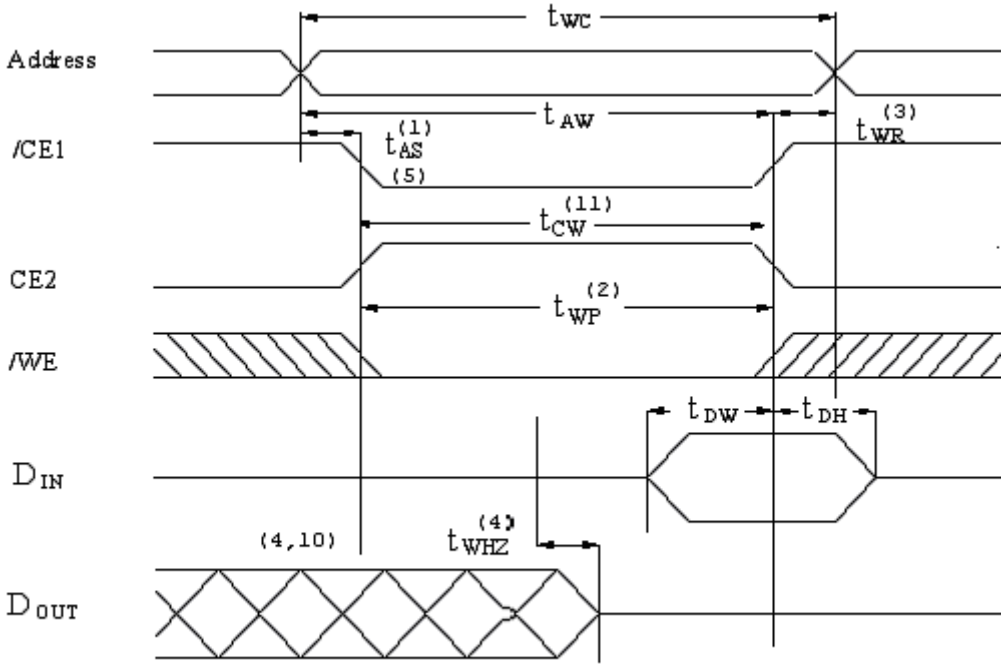

NOTES:

1. T_{AS} is measured from the address valid to the beginning of write.
2. The internal write time of the memory is defined by the overlap of /CE1 and CE2 active and /WE low. All signals must be active to initiate a write and any one signal can terminate a write by going inactive. The data input setup and hold timing should be referenced to the second transition edge of the signal that terminates the write.
3. T_{WR} is measured from the earlier of /CE1 or /WE going high or CE2 going low at the end of write cycle.
4. During this period, DQ pins are in the output state so that the input signals of opposite phase to the outputs must not be applied.
5. If the /CE1 low transition or CE2 high transition occurs simultaneously with the /WE low transitions or after the /WE transition, output remain in a high impedance state.
6. /OE is continuously low (/OE = V_{IL}).
7. D_{OUT} is the same phase of write data of this write cycle.
8. D_{OUT} is the read data of next address.
9. If /CE1 is low and CE2 is high during this period, DQ pins are in the output state. Then the data input signals of opposite phase to the outputs must not be applied to them.
10. Transition is measured ±500mV from steady state with C_L = 5pF as shown in Figure 1B. The parameter is guaranteed but not 100% tested.
11. T_{CW} is measured from the later of /CE1 going low or CE2 going high to the end of write.

■ ORDER INFORMATION

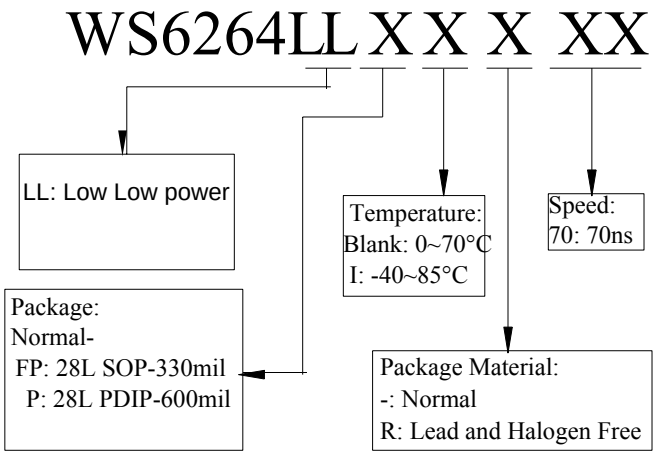

■ PACKAGE DIMENSIONS

28 pin SOP (330 mil) :

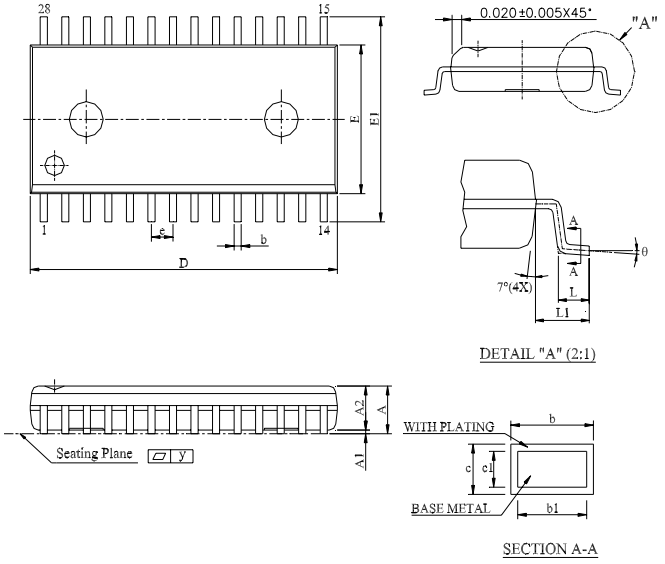

SYMBOL / UNIT		A	A1	A2	b	b1	c	c1	D	E	E1	e	L	L1	y	θ
mm	Min.	2.540	0.102	2.362	0.35	0.35	0.20	0.20	17.983	8.280	11.506	1.118	0.700	1.520	–	0°
	Nom.	2.692	0.226	2.489	–	–	–	–	18.110	8.407	11.811	1.270	0.964	1.720	–	–
	Max.	2.844	0.350	2.616	0.50	0.45	0.32	0.28	18.237	8.534	12.116	1.422	1.228	1.920	0.1	10°
inch	Min.	0.100	0.004	0.093	0.014	0.014	0.008	0.008	0.708	0.326	0.453	0.044	0.0276	0.0598	–	0°
	Nom.	0.106	0.009	0.098	–	–	–	–	0.713	0.331	0.465	0.050	0.0380	0.0677	–	–
	Max.	0.112	0.014	0.103	0.020	0.018	0.012	0.011	0.718	0.336	0.477	0.056	0.0484	0.0756	0.004	10°

28 pin PDIP (600mil):

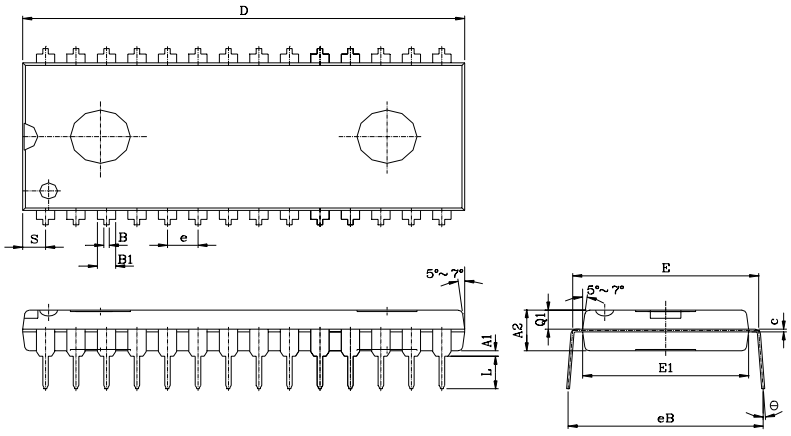

SYMBOL / UNIT		A1	A2	B	B1	c	D	E	E1	e	eB	L	S	Q1	θ
mm	Min.	0.254	3.683	0.330	1.270	0.152	36.957	14.986	13.716	2.540 (TYP)	15.748	3.048	1.778	1.651	3°
	Nom.	–	3.810	0.457	1.524	0.254	37.084	15.240	13.818		16.256	3.302	2.032	1.778	6°
	Max.	–	3.937	0.584	1.778	0.356	37.211	15.494	13.920		16.764	3.556	2.286	1.905	9°
inch	Min.	0.010	0.145	0.013	0.050	0.006	1.455	0.590	0.540	0.100 (TYP)	0.620	0.120	0.070	0.065	3°
	Nom.	–	0.150	0.018	0.060	0.010	1.460	0.600	0.544		0.640	0.130	0.080	0.070	6°
	Max.	–	0.155	0.023	0.070	0.014	1.465	0.610	0.548		0.660	0.140	0.090	0.075	9°