trackspot®



User Manual

High End Systems, Inc.
2105 Gracy Farms Lane
Austin, TX 78758 U.S.A.

P/N 60600034 Version 4.1

trackspot®

User Manual

© High End Systems, Inc. 1997, All Rights Reserved

Information and Specifications in this document are subject to change without notice. High End Systems, Inc. assumes no responsibility or liability for any errors or inaccuracies that may appear in this manual. The system software for the Status Cue® lighting console described in this manual is furnished under a license agreement and may be used or copied only in accordance with the terms of the agreement.

Trackspot User Manual

P/N 60600034 Version 4.1
September 02, 1999

Printed in the U.S.A.

C.C.

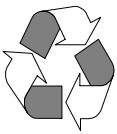

International Sales

U.S. and the Americas:

High End Systems, Inc.
2105 Gracy Farms Lane
Austin, TX 78758
USA
voice: (512) 836-2242
FAX: (512) 837-5290

or

High End Systems, Inc.
8200 Haskell Avenue
Van Nuys, CA 91406
USA
voice: (818) 947-0550
FAX: (818) 908-8975

Europe:

High End Systems GmbH
Lohstrasse 22
D-85445 Schwaig
Germany
voice: +49 8122 9903-0
FAX: +49 8122 9903-33

Singapore:

High End Systems Singapore Pte. Ltd.
1 Tannery Road 06-05
Cencon 1
Singapore 1334
voice: +65 742 8266
FAX: +65 743 9322

World Wide Web: http://www.highend.com

Trademarks

Trademarks used in this text: *Lightwave Research* and *High End Systems* are registered trademarks; *Trackspot, Status Cue,* and *Intellabeam* are trademarks of High End Systems, Inc.

Belden is a registered trademark of Belden, Inc. Philips is a registered trademark of Philips Lighting Company. Other trademarks and trade names may be used in this document to refer to either the entities claiming the marks and names or their products. High End Systems disclaims any proprietary interest in trademarks and trade names owned by others.

Patents

Trackspot may use one or more of the following patents: US 4,962,687; US 5,078,039; UK 2,043,769; US 5,331,822; US 5,402,326; US D372550; UK 2292896; US D365165; US 5,430,629; US D360,404; US 5,455,748; 0475082; US 5,506,762; M9604224.9; US 5,515,254; US D370080; UK 2.291,814; US 5,545.951; UK 2055842; UK 2,292,530; UK 2294909; UK 2292896; MR 8621996; and US 5,580,164.

Additional patents pending.

Declaration of Conformity

according to ISO/IEC Guide 22 and EN45104

Manufacturer's name:	High End Systems, Inc.
Manufacturer's address:	2105 Gracy Farms Lane Austin, Texas 78758 U.S.A.
Distributor's name:	High End Systems, Inc.
Distributor's address:	2105 Gracy Farms Lane Austin, Texas 78758 U.S.A.

Declares that the product

Product Name:	Trackspot
Product Number:	Trackspot
Product Options:	All

conforms to the following EEC directives:

73/23/EEC, as amended by 93/68/EEC
89/336/EEC, as amended by 92/31/EEC and 93/68/EEC

Equipment referred to in this declaration of conformity was first manufactured in compliance with the following standards in 1995:

Safety:	EN 60598-1 : 1993 EN 60598-2-17 : 1989 A1-A3 : 1993
EMC:	EN 55022, Class A ITE IEC 801-2, 1991 Level 2 (4/8 kV) IEC 801-3, Draft 5 Level 2 (3 V/m) IEC 801-4, 1988 Level 2 (1 kV/0.5 kV)

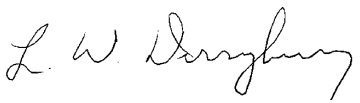

U.S.A., September 02, 1999
Lanny Derryberry, Compliance Engineer

Important Safety Information

Instructions pertaining to continued protection against fire, electric shock, exposure to excessive ultraviolet (UV) radiation, and injury to persons are found in Appendix D.

Please read all instructions prior to assembly, mounting, and operating this equipment.

Important: Informations De Sécurité
Les instructions se rapportant à la protection permanente contre les incendies, l'électrocution, l'exposition à un rayonnement ultraviolet (UV) excessif et aux blessures corporelles se trouvent dans l'Annexe D.

Veuillez lire toutes les instructions avant d'assembler, de monter ou d'utiliser cet équipement.

Wichtige Sicherheitshinweise
Sicherheitsanleitungen zum Schutz gegen Feuer, elektrischen Schlag, übermäßige UV-Strahlung und Verletzung von Personen finden Sie in Anhang D.

Vor der Montage, dem Zusammenbau und der Inbetriebnahme dieses Geräts alle Anleitungen sorgfältig durchlesen.

Informazioni Importanti Di Sicurezza
Le istruzioni sulla protezione da incendi, folgorazione, esposizione eccessiva a raggi ultravioletti (UV) e infortuni sono contenute nell'appendice D.

Si prega di leggere tutte le istruzioni prima di assemblare, montare e azionare l'apparecchiatura.

Informacion Importante De Seguridad
En el Apéndice D se encuentran instrucciones sobre protección continua contra incendios, descarga eléctrica, exposición excesiva a radiación ultravioleta (UV) y lesiones personales.

Lea, por favor, todas las instrucciones antes del ensamblaje, montaje y operación de este equipo.

Warranty Information

Limited Warranty

Unless otherwise stated, your product is covered by a two-year parts and labor limited warranty. Dichroic filters are not guaranteed against breakage or scratches to coating. It is the owner's responsibility to furnish receipts or invoices for verification of purchase, date, and

dealer or distributor. If purchase date cannot be provided, date of manufacture will be used to determine warranty period.

Returning an Item Under Warranty for Repair

It is necessary to obtain a Return Material Authorization (RMA) number from your dealer or point of purchase **BEFORE** any units are returned for repair. The manufacturer will make the final determination as to whether or not the unit is covered by warranty. Lamps are covered by the lamp manufacturer's warranty.

Any Product unit or parts returned to High End Systems must be packaged in a suitable manner to ensure the protection of such Product unit or parts, and such package shall be clearly and prominently marked to indicate that the package contains returned Product units or parts and with a Return Material Authorization number. Accompany all returned Product units or parts with a written explanation of the alleged problem or malfunction.

Please Note: Freight Damage Claims are invalid for fixtures shipped in non-factory boxes and packing materials.

Freight

All shipping will be paid by the purchaser. Items under warranty shall have return shipping paid by the manufacturer only in the Continental United States. **Under no circumstances will freight collect shipments be accepted.** Prepaid shipping does not include rush expediting such as air freight. Air freight can be sent customer collect in the Continental United States.

REPAIR OR REPLACEMENT AS PROVIDED FOR UNDER THIS WARRANTY IS THE EXCLUSIVE REMEDY OF THE CONSUMER. HIGH END SYSTEMS, INC. MAKES NO WARRANTIES, EXPRESS OR IMPLIED, WITH RESPECT TO ANY PRODUCT, AND HIGH END SPECIFICALLY DISCLAIMS ANY WARRANTY OF MERCHANTABILITY OR FITNESS FOR A PARTICULAR PURPOSE. HIGH END SHALL NOT BE LIABLE FOR ANY INDIRECT, INCIDENTAL OR CONSEQUENTIAL DAMAGE, INCLUDING LOST PROFITS, SUSTAINED OR INCURRED IN CONNECTION WITH ANY PRODUCT OR CAUSED BY PRODUCT DEFECTS OR THE PARTIAL OR TOTAL FAILURE OF ANY PRODUCT REGARDLESS OF THE FORM OF ACTION, WHETHER IN CONTRACT, TORT (INCLUDING NEGLIGENCE), STRICT LIABILITY OR OTHERWISE, AND WHETHER OR NOT SUCH DAMAGE WAS FORESEEN OR UNFORESEEN.

Warranty is void for unauthorized repairs or parts or if the product is misused, damaged, or modified in any way. This warranty gives you specific legal rights, and you may also have other rights which vary from state to state.

FCC Information

This equipment has been tested and found to comply with the limits for a Class A digital device, pursuant to part 15 of the FCC rules. These limits are designed to provide reasonable protection against harmful interference when the equipment is operated in a commercial environment. This equipment generates, uses, and can radiate radio frequency energy and, if not installed and used in accordance with the instruction manual, may cause harmful interference to radio communications. Operation of this equipment in a residential area is likely to cause harmful interference in which case the user will be required to correct the interference at his own expense.

Product Modification Warning

High End Systems products are designed and manufactured to meet the requirements of United States and International safety regulations. Modifications to the product could affect safety and render the product non-compliant to relevant safety standards.

Mise En Garde Contre La Modification Du Produit

Les produits High End Systems sont conçus et fabriqués conformément aux exigences des règlements internationaux de sécurité. Toute modification du produit peut entraîner sa non conformité aux normes de sécurité en vigueur.

Produktmodifikationswarnung

Design und Herstellung von High End Systemen entsprechen den Anforderungen der U.S.A. und den internationalen Sicherheitsvorschriften. Abänderungen dieses Produktes können dessen Sicherheit beeinträchtigen und u. U. gegen die diesbezüglichen Sicherheitsnormen verstoßen.

Avvertenza Sulla Modifica Del Prodotto

I prodotti di High End Systems sono stati progettati e fabbricati per soddisfare i requisiti delle normative di sicurezza statunitensi ed internazionali. Qualsiasi modifica al prodotto potrebbe pregiudicare la sicurezza e rendere il prodotto non conforme agli standard di sicurezza pertinenti.

Advertencia De Modificación Del Producto

Los productos de High End Systems están diseñados y fabricados para cumplir los requisitos de las reglamentaciones de seguridad de los Estados Unidos e internacionales. Las modificaciones al producto podrían afectar la seguridad y dejar al producto fuera de conformidad con las normas de seguridad relevantes.

Table of Contents

Introduction

Trackspot® Features Intro-1
Caution and Warning Symbols Intro-2
    Cautions Intro-2
    Warnings Intro-2
Getting Help Intro-3
Specifications Intro-4
    Model Information Intro-4
    Physical Specifications Intro-4
    Electrical Specifications Intro-4
    Environmental Specifications Intro-5
    Cable and Connector Specifications Intro-5
        DMX data cables Intro-5
        DMX data connectors Intro-5
        DMX data terminators Intro-5
    Safety Specifications Intro-5
Optional Accessories Intro-6

Chapter 1 Setup and Assembly

Unpacking Trackspot® 1-1
    Saving the Shipping Materials 1-1
    Inspecting the Contents 1-1
Installing the Yoke 1-1
Selecting the Voltage 1-3
Powering Up the Fixture 1-3
Understanding LED Indicators 1-4
    Fan LED 1-4
    Enable LED 1-4
    Audio LED 1-4

Chapter 2 Configuring Your Trackspot®

Choosing a Control Mode 2-1
    DMX 512 Protocol 2-1
    LWR Protocol 2-2
    Standard Analog 2-2
    Stand Alone Operation (Master/Slave) 2-2
Enabling the Control Mode 2-3
    Personality Switches 2-3
    Address Switches 2-6
Installing Remote Enable/Disable 2-6
    SPST Switch 2-7
    External Voltage Source 2-7
Mounting the Fixture 2-8

Additional Hardware 2-8
Truss or Other Support System 2-8
Safety Cable 2-9
Clamp 2-9
Obtaining Cabling and Terminators 2-10
Constructing Cabling 2-11
Constructing Terminators 2-11
Linking the Fixtures 2-12
DMX 512 Protocol 2-12
LWR Protocol 2-14
Standard Analog 2-15
Stand Alone Operation (Master/Slave) 2-16
Focusing the Fixture 2-17

Chapter 3 General Maintenance

Replacing Parts 3-1
Replacing the Lamp 3-1
Replacing Power Supply Fuses 3-4
Replacing the Mirror Assembly 3-6
Replacing or Installing Custom Gobos 3-7
Cleaning Your Trackspot® 3-9
Cleaning the Outer Surfaces 3-9
Cleaning the Internal Components 3-10
Removing the Color Wheel or Gobo Wheel 3-10
Reinstalling the Color Wheel or Gobo Wheel 3-12
Adjusting Wheel Clearance 3-12

Chapter 4 Troubleshooting

Fixture does not work: no LEDs, fans, lamp, or other functionality (fixture appears dead) 4-1
Lamp will not strike 4-1
Light output is low, beam edge is very soft, images fuzzy 4-1
Lamp shuts off 4-2
Error tone (two level beeping) after the fixture homes 4-2
Yellow Enable LED or green Audio LED does not illuminate 4-3
Fixture does not respond to data 4-3
Color wheel or gobo wheel is not centered in the beam or is in the wrong position 4-3
None of the motors work and the yellow Enable LED does not illuminate 4-4

Appendix A DMX Control of Trackspot®

Start Channels and Construct Parameters A-1
Low Resolution Mode A-1
High Resolution Mode A-1

Appendix B Trackspot® MSpeed Times

DMX 512 Protocol MSpeed Times B-1
LWR Protocol MSpeed Times B-5

Appendix C Personality and Address Switch Settings

Personality Switch Settings C-1
Address Switch Settings C-2

Appendix D Important Safety Information

English Version D-1
Appendice D
IMPORTANTES INFORMATIONS SUR LA SÉCURITÉ D-2
Anhang D
WICHTIGE HINWEISE FÜR IHRE SICHERHEIT D-3
Apéndice D
INFORMACIÓN IMPORTANTE DE SEGURIDAD D-4
Appendice D
IMPORTANTI INFORMAZIONI PER LA SICUREZZA D-5
VIGTIG FIKKER HEDS INFORMATION - DANMARK D-6

Glossary

List of Figures

Figure 1-1. Side view of Trackspot 1-2
Figure 1-2. Inserting the yoke screws and T-handles 1-2
Figure 1-3. Trackspot rear panel 1-3
Figure 1-4. LED location on the rear panel 1-4
Figure 2-1. Address and personality DIP switches 2-3
Figure 2-2. Connecting a remote enable/disable switch to the master fixture 2-7
Figure 2-3. Attaching two C-clamps to the Trackspot yoke 2-10
Figure 2-4. Attaching a safety cable to the mounted fixture 2-10
Figure 2-5. XLR 3-pin connectors 2-11
Figure 2-6. Data cable terminator 2-11
Figure 2-7. Linking fixtures to a DMX 512 protocol controller 2-13
Figure 2-8. Linking fixtures to a LWR protocol controller 2-14
Figure 2-9. Analog In connector 2-15
Figure 2-10. Linking fixtures to a standard analog controller 2-15
Figure 2-11. Linking master and slave fixtures together 2-16
Figure 2-12. Lens tube adjustment 2-17
Figure 3-1. Underside of Trackspot 3-2

Figure 3-2. Underside of Trackspot with access door removed 3-2
Figure 3-3. Proper way to handle a QT 8500 lamp 3-3
Figure 3-4. Installing a new lamp 3-3
Figure 3-5. Fuse locations on the circuit board 3-5
Figure 3-6. Fuse housing location on the rear panel 3-5
Figure 3-7. Mirror assembly 3-6
Figure 3-8. Installing a new mirror 3-6
Figure 3-9. Custom gobo 3-7
Figure 3-10. Gobo wheel and gobo wheel sensor location 3-8
Figure 3-11. Custom gobo aperture in gobo wheel 3-8
Figure 3-12. Trackspot internal components 3-10
Figure 3-13. Components of the color and gobo wheels 3-11
Figure 3-14. Pull wheel up and out to remove 3-11
Figure 3-15. Sensor below each wheel 3-11
Figure 3-16. Homing slot on wheel 3-11
Figure 3-17. Allen screws on the color wheel and gobo wheel hubs 3-13

List of Tables

Table Intro-1. Trackspot optional accessories Intro-6
Table 2-1. Channel assignments 2-1
Table 2-2. Personality switch settings - operating modes 2-3
Table 2-3. Personality switch settings - control modes 2-5
Table 2-4. Address switch settings 2-6
Table 3-1. Description and function of Trackspot fuses 3-4
Table 4-1. Symptoms and Solutions 4-1
Table A-1. Starting channels in 7-channel DMX 512 protocol A-2
Table A-2. Construct parameters in DMX 512 low resolution mode A-4
Table A-3. Construct parameters in DMX 512 high resolution mode A-5
Table B-1. DMX 512 protocol MSpeed times B-1
Table B-2. LWR protocol MSpeed times B-5
Table C-1. Personality switch settings for all control modes and operating modes C-1
Table C-2. Address switch settings for LWR protocol and master/slave mode C-2

Introduction

Congratulations on your purchase of the Trackspot® automated luminaire. Trackspot is a versatile and affordable automated fixture that outperforms any luminaire in its class. Superb engineering, precision optics, and a variety of control options makes Trackspot the best value in low-cost intelligent lighting.

The Trackspot color wheel features eight richly-saturated dichroic colors (plus white) and a color corrector. The 10-position gobo wheel includes two multi-colored dichroic patterns and a replaceable custom gobo position. Trackspot has an ultra-fast, smooth pan and tilt capability as well as optical sensors that eliminate color or gobo positioning errors. Control options include standard analog, Lightwave Research (LWR) protocol, and DMX 512 protocol. Trackspot is also fully functional with no controller at all (stand alone mode).

Trackspot® Features

- Color wheel featuring eight dichroic colors plus color corrector and open (white)
- Gobo wheel with eight unique patterns, including two multi-colored dichroic patterns, and a replaceable custom gobo position
- Various control options, including stand alone operation, standard analog, LWR protocol, and DMX 512 protocol
- Precision stepper motors for pan and tilt movement
- Optical sensor on color and gobo wheels to prevent positioning errors
- External voltage switch with selectable voltage for 100V, 120V, 140V, 200V, 220V, or 240VAC at 50 or 60 Hz
- Thermal overload protection
- Multitap power transformer that provides over-voltage compensations to help prevent surge-related problems
- QT 8500 lamp specifically designed for use with Trackspot combining affordability, long lamp life (300 hour average), reliability, high output, and stable color temperature throughout the life of the lamp
- Electronic circuit design for 100% dimming
- Variable speed strobing
- 32 pre-programmed effects sequences

- Built-in condenser microphone that picks up ambient bass to trigger changes in the pre-programmed effects sequences
- Easy, quick lamp replacement with no optimization needed
- Remote system enable/disable using low voltage control
- Break-resistant mirror
- Pan and tilt invert option
- Low power consumption: 3.1 A @120V, 1.55 A @240V
- Complies with safety requirements in the USA, Canada, and the European community.

Caution and Warning Symbols

The following international symbols appear in margins throughout this manual to highlight caution and warning messages.

Cautions

Not heeding Caution messages could result in personal injury and/or damage to equipment.



Caution: This symbol appears adjacent to Caution messages.



Hot Surface: This symbol indicates a hot surface.

Warnings

Not heeding Warning messages could result in serious personal injury.



Warning: This symbol appears adjacent to high voltage warning messages.



Fire Hazard: This symbol indicates that a fire hazard is present.



Eye Protection: This symbol indicates that eye protection is required.

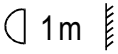

Minimum Distance: This symbol indicates the minimum distance to a lighted object, which in this case is 1 meter.

Getting Help

Contact High End Systems Customer Service in one of the ways shown:

U.S., the Americas, and Europe:

Service address:
High End Systems, Inc.
2105 Gracy Farms Lane
Austin, TX 78758 USA

From 8 a.m. to 6 p.m. (U.S. Central time)
Monday through Friday: (800) 890-8989
24 hour FAX: (512) 834-9195
24 hour voice mail: (512) 837-3063
(800) 890-8989

or

Service address:
High End Systems, Inc.
8200 Haskell Avenue
Van Nuys, CA 91406 USA

From 8 a.m. to 5 p.m. (U.S. Pacific time)
Monday through Friday: (818) 947-0550
FAX: (818) 908-8975

Singapore:

High End Systems Singapore Pte. Ltd.
1 Tannery Road 06-05
Cencon 1
Singapore 1334

voice: +65 742 8266
FAX: +65 743 9322

24-hour customer service World Wide Web response: http://info.highend.com/service/service.html

High End Systems World Wide Web site: http://www.highend.com

Specifications

Model Information

Model:	Trackspot
Manufacturer:	Lightwave Research 2105 Gracy Farms Lane Austin, TX 78758 USA
Distributor:	High End Systems, Inc. 2105 Gracy Farms Lane Austin, TX 78758 USA
Product Number:	Trackspot

Physical Specifications

Dimensions (including yoke):	655mm L x 297mm W x 254mm H (25.8" L x 11.7" W x 10" H)
Weight:	10.4 kg (23.0 lbs)
Lamp type:	Philips® QT 8500, 250 W only

Electrical Specifications

Factory setting:	240 VAC
Voltage rating:	100V, 120V, 140V, 200V, 220V, 240V
Power consumption:	3.5 A @ 100V 2.9 A @ 120V 2.5 A @ 140V 1.75 A @ 200V 1.6 A @ 220V 1.5 A @ 240V
Rated power:	350W
Rated frequency:	50/60 Hz
Power factor:	120V, 60 Hz: 0.98 240V, 50 Hz: 0.96

Maximum winding temperature, Tw: 130° C (266° F)
Maximum capacitor temperature, Tc: 85° C (185° F)



Warning: Class I equipment - For continued protection against electric shock connect this equipment to an earthed (grounded) power source only.

Environmental Specifications

Maximum ambient temperature, Ta:	50° C (122° F)
Maximum exterior surface temperature:	67° C (153° F)
Minimum distance to lighted object:	1.0 meter (3.28 ft)
Minimum distance to flammable objects:	1.0 meter (3.28 ft)



Caution: Use in dry locations only.



Warning: Do not mount on a flammable surface.

Cable and Connector Specifications

DMX data cables

Belden® 9841 or equivalent (meets specifications for EIA RS-485 applications) with the following characteristics:

- 2-conductor twisted pair plus a shield
- maximum capacitance between conductors - 30 pF/ft.
- maximum capacitance between conductor and shield - 55 pF/ft.
- maximum resistance of 20 Ω / 1000 ft.
- nominal impedance 100-140 Ω

DMX data connectors

3-pin male and female XLR connectors

DMX data terminators

Male XLR connector with 120 ohm terminator

Safety Specifications

Safety standards:	EN 60598-1 : 1993 EN 60598-2-17 : 1989 A1-A3 : 1993
EMC standards:	EN 55022, Class A ITE IEC 801-2, 1991 Level 2 (4/8 kV) IEC 801-3, Draft 5 Level 2 (3 V/m) IEC 801-4, 1988 Level 2 (1 kV/0.5 kV)

CE

UL 153
CSA 22.2 No. 12

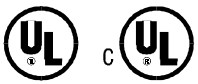

Optional Accessories

Table 1-1 below lists the Trackspot optional accessories available from your High End Systems dealer/distributor.

Table 1-1. Trackspot optional accessories

Part Description	Part Number
Status Cue Lighting Console	22020002
Intellabeam LCD Controller	01020006
Universal Controller	23020003
Trackspot Special Analog Controller	16020001
Modular Gobo wheel with tabs	99110017
Custom Gobo	Call*
QT-8500 Trackspot replacement lamp	55030036
Keal road case, Trackspot (4 fixtures)	16070002
Keal road case, Trackspot (4 fixtures and 1 controller)	16070001
10' data cable, 3-pin XLR heavy duty	55050005
25' data cable, 3-pin XLR heavy duty	55050006
50' data cable, 3-pin XLR heavy duty	55050007
100' data cable, 3-pin XLR heavy duty	55050008
Galvanized safety cable with spring snap	12040001
Deluxe C-clamp with silver powdercoat finish	55000004
100' cable (for Trackspot Special Analog Controller only)	07050001
50' cable (for Trackspot Special Analog Controller only)	07050002
Interconnect cable extender	90409006
Unprogrammed RAM card for Intellabeam LCD or Universal controller	80440017

*Call** - For more information about optional accessories, contact either your High End Systems dealer/distributor, High End System Sales, or visit the High End Systems Web site. For contact information, see "International Sales" on page ii.

Chapter 1
Setup and Assembly

Unpacking Trackspot®

Unpack your fixture and verify that it arrived complete and without any damage.

Saving the Shipping Materials

Do not discard the shipping carton and packing materials. The carton and packing materials are specifically designed to protect the product during transport.

High End Systems assumes no responsibility for products that have been damaged during transport. Therefore, you should return a product for repair in its original shipping carton and packing materials.

Note: Before sending anything to the factory, call your High End Systems dealer/distributor for a Return Material Authorization (RMA) number. The factory cannot accept any goods shipped without an RA number.

Inspecting the Contents

Carefully unpack the carton and inspect the contents for damage. If any of the items in the following list are missing or damaged, notify both the shipping agent and your sales agent immediately.

- Trackspot fixture
- set of five Philips® QT 8500, 250 W lamps
- yoke (yoke screws and T-handles are already installed on the fixture.)

Installing the Yoke

You will need:

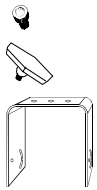

- 1/4 inch allen wrench
- two 1/4 inch yoke screws*
- two clamping T-handles*
- yoke*

**These items are shipped with the Trackspot fixture.*

To install the yoke:

1. Unplug the fixture. If the fixture has been operating, allow the fixture to cool for at least 5 minutes.
2. Place the fixture on a sturdy surface so you can easily access both sides of the fixture.
3. Remove the yoke screws and T-handles already installed in the Trackspot fixture (see Figure 1-1).

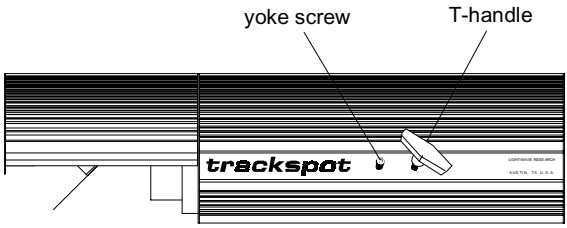

Figure 1-1. Side view of Trackspot

4. Place the yoke ends over the fixture and align the yoke's screw holes with the screw holes on the fixture (see Figure 1-2).

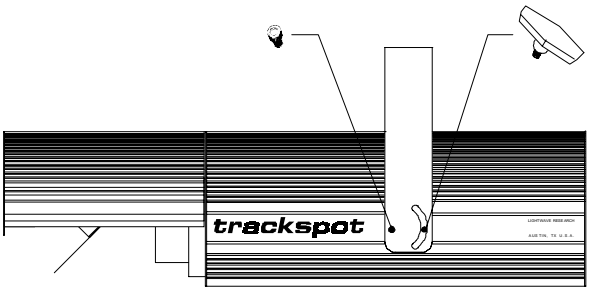

Figure 1-2. Inserting the yoke screws and T-handles

5. Replace the yoke screws through the round holes in each side of the yoke and tighten firmly.



Caution: You must tighten the yoke screws firmly. The fixture may fall from the yoke if it is not secured.

6. Replace the T-handles through the semi-circular opening in each side of the yoke. The T-handles should not be very tight; you will adjust the T-handles when mounting the fixture.

On the top of the yoke are three 13 mm (1/2 inch) diameter mounting holes used to mount the fixture. For more information, see the section titled "Mounting the Fixture" on page 2-8.

Selecting the Voltage

Trackspot is factory set to 240 volts. If your power source is not 240 volts, you must change the fixture's input voltage. Trackspot will automatically adjust to the appropriate frequency rating for any voltage setting you select.

Warning: Be sure to match the fixture's selectable voltage to your power source prior to operating this equipment.

You will need:

- wide tip, flat head screwdriver

To select the voltage:

1. Unplug the fixture.
2. Insert a flat head screwdriver into the slot on the voltage select switch located on the rear panel of the fixture (see Figure 1-3).
3. Push the switch face in and turn until the line on the outer ring is pointed at the voltage that is equal to the power source you are using (see Figure 1-3).

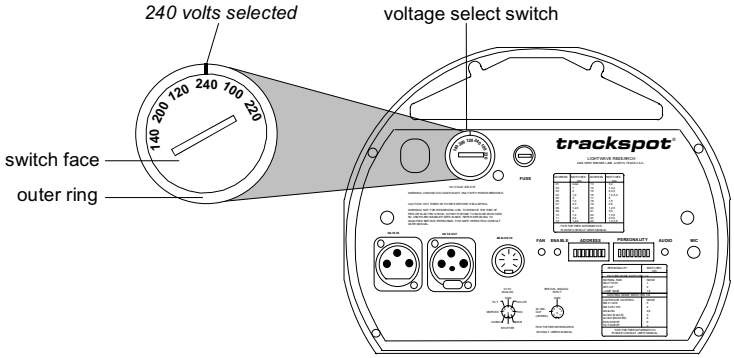

Figure 1-3. Trackspot rear panel

   If the desired voltage is not listed on the voltage select switch, choose the next higher voltage. For example, if you have a 230 volt power source, you must use the 240 volt setting.

4. After setting the correct voltage, make sure that the switch face is flush with the outer ring (see Figure 1-3).

Powering Up the Fixture

Unlike other High End Systems lighting equipment, Trackspot does not have a power switch. Powering up the fixture is as easy as plugging it into a power source. However, it is *very important* that you unplug the fixture before performing certain procedures as shown in this manual.

Understanding LED Indicators

This section describes the LEDs (Light Emitting Diode) on the Trackspot rear panel: Fan, Enable, and Audio (see Figure 1-4). If you are experiencing problems with your Trackspot fixture, these LEDs may provide insight on where the problem is originating. See "" on page 4-1 for possible solutions to LED-related symptoms.

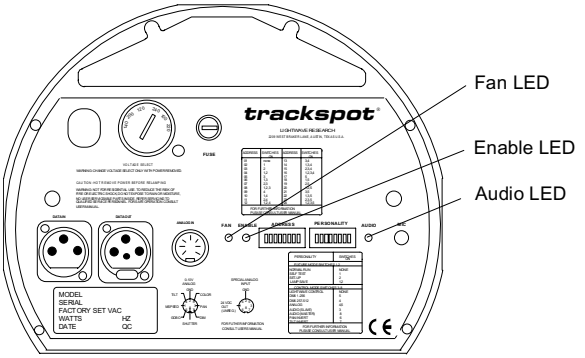

Figure 1-4. LED location on the rear panel

Fan LED

The red Fan LED monitors the voltage to the cooling fan. The Fan LED illuminates when the fixture is first powered up, and stays illuminated for two minutes after the lamp is extinguished. Trackspot comes equipped with thermal overload protection to automatically extinguish the lamp if the maximum temperature inside the fixture is exceeded. If the fixture overheats, the Fan LED will flash four times, pause, and repeat.

Enable LED

The yellow Enable LED monitors the power applied to the motors. The Enable LED should be illuminated whenever the fixture is ON. If the logic board is not receiving the 24 volts required to operate the fixture, the Enable LED will not illuminate.

Audio LED

The green Audio LED monitors the fixture's response to sound. The Audio LED illuminates when the fixture is ON and ambient bass is registered, regardless of the configuration. (If the fixture is not programmed to receive audio bass frequencies, the sound trigger is ignored.)

Chapter 2
Configuring Your Trackspot®

To prepare your Trackspot for operation, you must choose a control mode, set the personality and address switches, mount the fixture, link the fixture, and focus the fixture.

Choosing a Control Mode

There are four different control modes that will operate your Trackspot fixture: DMX 512 protocol, LWR protocol, standard analog, and stand alone operation (master/slave).

When configured for DMX 512 protocol, LWR protocol, or stand alone operation, Trackspot uses seven contiguous digital channels to control its constructs. When used with a standard analog controller, Trackspot uses either six or seven contiguous analog channels per fixture. To determine whether you will use six or seven analog channels, see "Standard Analog" on page 2-15. The digital/analog channels have the functions shown in Table 2-1 below:

Table 2-1. Channel assignments

Channel	Feature
1	Pan
2	Tilt
3	Color
4	Gobo
5	Shutter
6	Dim
7	MSpeed

DMX 512 Protocol

DMX 512 (*D* for *digital*, *MX* for *multiplex* and *512* is the number of channels per link) is a reliable and efficient control protocol. Developed by the United States Institute of Theatre Technology (USITT), DMX 512 is the standard method used in the lighting industry for controlling lighting fixtures and other devices (such as hazers and lasers).

A controller using DMX 512 protocol (such as the Status Cue® Lighting Console) can control a large number of different types of devices made by various equipment manufacturers, such as High End Systems, on the same link.

You can control up to 72 Trackspots per DMX 512 link in either low or high resolution mode. For more information on resolution modes, see "Start Channels and Construct Parameters" on page A-1.

LWR Protocol

Lightwave Research (LWR) protocol was created to enable 10-bit resolution for mirror positioning. Other control protocols (including DMX 512) allow for only 8-bit resolution. LWR protocol controls High End Systems fixtures only. Other vendors besides High End Systems have controllers that support LWR protocol. Consult the documentation provided with your controller for information about protocol support.

The Intellabeam® LCD Controller, Universal™ Controller, and the Status Cue® System, all manufactured by Lightwave Research, support LWR protocol and can be used to control Trackspot fixtures. Consult the documentation provided with your controller to determine the number of fixtures you can control per link.

Standard Analog

Trackspot can be controlled by any 0-10 volt analog controller.

When operating under an analog controller, each fixture must be *individually* attached to the controller. The controller sends analog output to each fixture that is connected to the controller. To determine the number of fixtures per link that can be controlled by your analog controller, consult the documentation provided with your controller.

Stand Alone Operation (Master/Slave)

Trackspot can be fully functional without the use of a controller. Stand alone operation, also called master/slave mode, uses one fixture (designated as the *master*) to control the other fixtures (designated as the *slaves*). When operating in a master/slave mode, the master fixture's audio microphone registers ambient bass noise to advance through Trackspot's 32 preset programs.

For greater control of the preset programs while in master/slave mode, connect the master fixture to a Trackspot® Special Analog Controller.

You can wire Trackspot fixtures operating in master/slave mode for remote lamp enable/disable. For more information, see "Installing Remote Enable/Disable" on page 2-6.

Enabling the Control Mode

Once you determine which control mode to use, you must set the fixture's DIP switches to enable each Trackspot for that control mode and to assign fixture order (or starting channel). The personality and address DIP switches (all factory set OFF) are located on the rear panel of the fixture (see Figure 2-1).

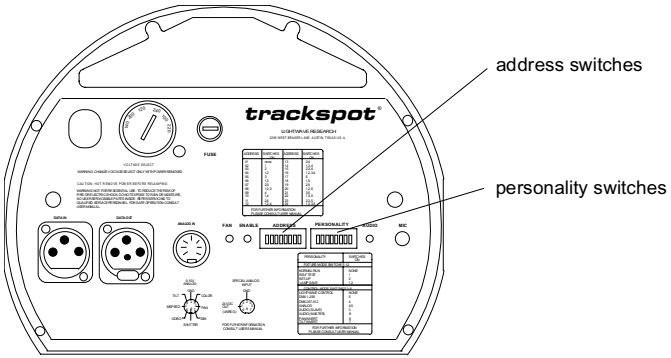

Figure 2-1. Address and personality DIP switches

For sample personality and address switch settings in each control mode, see "Linking the Fixtures" on page 2-12.

Personality Switches

The personality switch settings determine the fixture's operating mode and/or control mode. See Table 2-2 below for a detailed description of personality switch settings. For a quick-reference table of personality switch settings, see "Personality Switch Settings" on page C-1.

Table 2-2. Personality switch settings - operating modes

Operating Modes	Personality Switches ON	Description
Self Test	PERSONALITY 8 7 6 5 4 3 2 1 on	Starts an internal self-diagnostic routine which verifies that the major functions of the fixture (pan, tilt, gobo wheel, color wheel, and shutter) are working properly. The fixture performs its homing procedure once (you will hear clattering sounds as the shutter and mirror seek their home position) and then repeats its self-test until you set switch 1 OFF. Note: Although a controller is not required for the self-test, setting personality switch 1 ON will override any controller that might be attached to the fixture.

Table 2-2. Personality switch settings - operating modes

Set Up (Focus)		The fixture performs its homing procedure and the lamp turns on, allowing you to adjust the focus. Toggle *address* switch 1 ON and OFF while in setup mode to select a gobo pattern that helps you clearly see the effects of your focusing adjustments. Note: Although a controller is not required for the self-test, setting personality switch 1 ON will override any controller that might be attached to the fixture. For information on how to focus the fixture, see “Focusing the Fixture” on page 2-17.
Lamp Save		Increases the lamp life by lowering the applied voltage to the lamp by 10 percent. This setting will decrease light output and should be used to compensate for high line voltage.
Auto Dim Override (LWR)		Allows a fixture operating in LWR protocol to override the Auto Dim feature. The Auto Dim feature helps save the life of the lamp as follows: when the shutter closes, the lamp stays on for 1.5 - 3.0 minutes and then dims. When the shutter is re-opened, the lamp instantly returns to program intensity. Auto Dim occurs in all control modes; however, this feature can be overridden using LWR protocol when these personality switches are ON.
Pan Invert		Inverts the direction of the pan motor. This setting allows opposing fixtures to respond to mirror movement commands in the same direction. 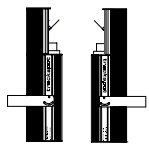
Tilt Invert		Inverts the direction of the tilt motor. This setting allows opposing or upside down fixtures to respond to mirror movement commands in the same direction. 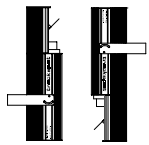

Table 2-3. Personality switch settings - control modes

Control Modes	Personality Switches ON	Description
Low Resolution DMX mode (channels 1-256)		Configures the fixture to receive DMX channels 1-256 in low resolution mode. For more information, see “Low Resolution Mode” on page A-1.
Low Resolution DMX mode (channels 257-512)		Configures the fixture to receive DMX channels 257-512 in low resolution mode. For more information, see “Low Resolution Mode” on page A-1.
High Resolution DMX mode (channels 1-256)		Configures the fixture to receive DMX channels 1-256 in high resolution mode. For more information, see “High Resolution Mode” on page A-1.
High Resolution DMX mode (channels 257-512)		Configures the fixture to receive DMX channels 257-512 in high resolution mode. For more information, see “High Resolution Mode” on page A-1.
LWR protocol		The fixture must be controlled by LWR protocol.
Standard Analog		The fixture must be controlled by a 0-10 volt standard analog controller.
Stand Alone (Audio Master)		Configures the fixture for stand alone operation and designates the fixture as the master. Also supplies power to the controller when used with the Trackspot Special Analog Controller. Only one fixture in a link may be selected as the master.
Stand Alone (Audio Slave)	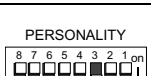	Configures the fixture for stand alone operation and designates the fixture as a slave.

Address Switches

The address switch settings determine either the fixture's numerical order in a link or its starting channel. The control mode you chose determines how you set the address switches. See Table 2-4 for address switch settings.

Table 2-4. Address switch settings

Control Mode	Address Switch Settings
DMX 512	Set each fixture's address switches to its starting channel using either high or low resolution mode (see Table A-1 on page A-2).
LWR Protocol	Set each fixture's address switches to represent the fixture's sequential numerical order in the link (see Table C-2 on page C-2).
Standard Analog	Set all address switches OFF.
Stand Alone (Master/Slave)	On the master Trackspot fixture, set the address switches to represent the *total* number of Trackspot fixtures in the link (including the master). On each slave fixture, set the address switches to represent the fixture's numerical order in the link. See Table C-2 on page C-2 for address switch settings.

Installing Remote Enable/Disable

If your Trackspot fixtures are operating in stand alone mode, you can remotely enable/disable the fixtures by installing either a remote SPST switch or an external voltage source.



Warning: Unplug the fixture before installing remote enable/disable.

You will need:

- either a SPST (single-pole, single-throw) switch *or* a 10 volt source (such as a battery, a 0-10 volt analog control source, etc.)
- suitable length of 18-24 gauge two-conductor wire (The gauge of conductor you need will depend on the distance from your remote switch or external voltage source to the master fixture.)
- one male 8-pin DIN connector

SPST Switch

Note: Connect *only* the master fixture to the SPST switch.

To install an SPST switch:

1. Unplug the fixture.
2. Locate the female Analog In connector on the rear panel of the master Trackspot fixture (see Figure 2-2).

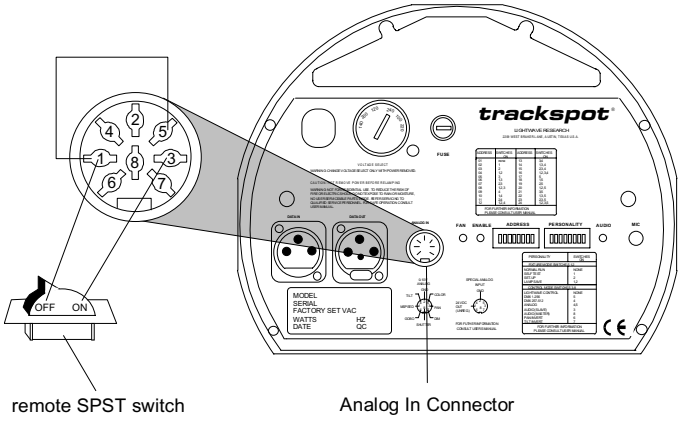

Figure 2-2. Connecting a remote enable/disable switch to the master fixture

3. Connect DIN pin 1 and pin 5 together (see Figure 2-2). You can connect these pins either at the fixture or in the male 8-pin DIN connector.
4. Connect DIN pin 1 and pin 3 to the SPST switch (see Figure 2-2).

When correctly connected to the SPST switch, the fixtures will be enabled when the circuit is closed and disabled when the circuit is open.

External Voltage Source

Note: Connect *only* the master fixture to the external voltage source.

To install an external voltage source:

1. Unplug the fixture.
2. Locate the Analog In female connector on the rear panel of the master Trackspot fixture (see Figure 2-2).
3. Connect analog DIN pin 1 and pin 5 together (see Figure 2-2). You can connect these pins either at the fixture end or in the male 8-pin DIN connector.

4. Connect analog DIN pin 2 to the negative voltage and analog DIN pin 3 to the positive voltage using the conductor.

When correctly connected to the external voltage source, the fixtures will be enabled when you apply 10 to 40 volts DC on pin 3. The fixtures will be disabled when you apply zero volts DC on pin 3.

Mounting the Fixture

Trackspot is designed to be mounted in any orientation. Before mounting the fixture, follow the precautions and suggestions below:

- Verify the input voltage you are using matches the Trackspot fixture's voltage selection switch. *Unplug the fixture before turning the voltage select switch*. See "Specifications" on page Intro-4 and "Selecting the Voltage" on page 1-3 for more information.
- When you mount or position the fixture, make sure that no obstacles cover or block the fixture's cooling fan intake (see Figure 3-1 on page 3-2). A blocked airpath could result in damage to the fixture.

Heed the following warnings to guard against personal injury and damage to the fixture.



Caution: **Equipment suitable for dry locations only. Do not expose this equipment to rain or moisture.**





Warnings:

1) **Do not mount on a flammable surface.**
2) **Maintain a minimum distance of 1.0 meter (3.28 feet) from combustible materials.**
3) **Maintain a minimum distance of 1.0 meter (3.28 feet) from lighted object. This means the fixture must be positioned at least 1 meter away from the object it is illuminating.**

Additional Hardware

To mount the fixture, you will need a truss or other support system, one or more safety cables, and one or more clamps.

Truss or Other Support System

If you are mounting the fixture on a truss or another type of support, verify the truss or support will handle the weight of all the devices you are mounting. The Trackspot fixture weight is listed in "Specifications" on page Intro-4.

Safety Cable

High End Systems strongly recommends that you use safety cable when mounting any fixture. You must supply your own safety cable and verify the cable is capable of supporting the weight of the Trackspot fixture. You can order galvanized safety cables from your High End Systems dealer/distributor (see "Optional Accessories" on page Intro-6).

Clamp

You must supply your own clamp(s) and verify the clamp is capable of supporting the weight of the Trackspot fixture. You can order deluxe C-clamps for a two-inch truss from your High End Systems dealer/distributor (see "Optional Accessories" on page Intro-6).



Caution: Make sure the fixture cannot be rotated 360°. (Using two clamps is a good way to make sure the fixture cannot be rotated in a full circle.) Allowing the fixture to rotate 360° could loosen the clamp mounting bolts and cause the fixture to fall from its clamp.

Note: Due to the wide variety of possible lighting designs, High End Systems cannot make specific mounting recommendations. Consider the following procedure as a *suggested guideline* only.

Suggested mounting procedure:

1. Unplug the fixture. If the fixture has been operating, allow the fixture to cool for at least 5 minutes.
2. Use two people to mount each Trackspot fixture: one person to hold the fixture while it is being secured in place, and one person to the secure the fixture to its support and attach safety cables.
3. Always stand on a firm, stable surface when mounting a fixture to its support. The fixture should be at a height where you can comfortably work on it, and should either be resting on a stable surface, or held in a stable manner. *Do not allow one person to both support and mount the fixture.*
4. Attach suitable clamp(s) through the holes on top of the yoke. If you are attaching one clamp, use the middle hole on the yoke. If you are attaching two clamps (as shown in Figure 2-3), attach one clamp to each of the two outer holes on the yoke. *Use locking washers when attaching the clamp(s) to the yoke.*

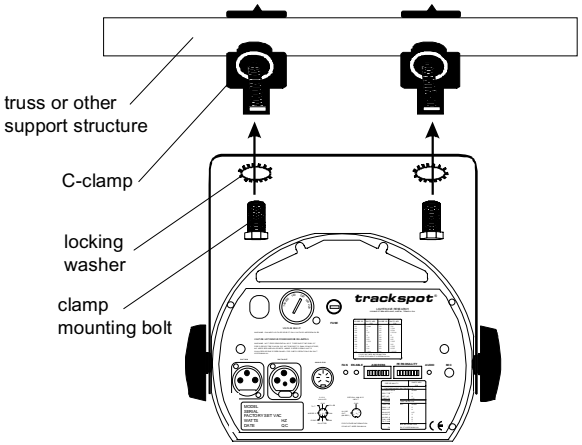

Figure 2-3. Attaching two C-clamps to the Trackspot yoke

5. Tighten the clamp(s) firmly to the yoke and to the support.
6. Loop one or more suitable safety cables around the support and the top of the yoke (see Figure 2-4). The safety cable(s) can be looped one or more times around the truss or support.

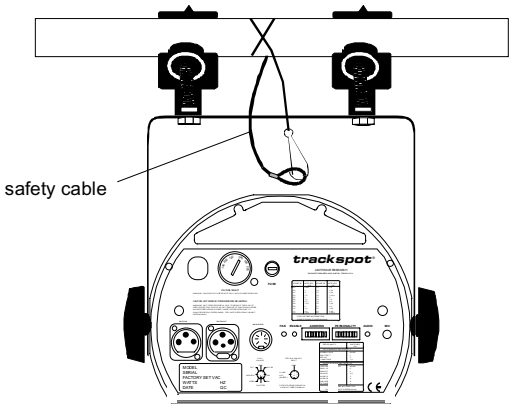

Figure 2-4. Attaching a safety cable to the mounted fixture

Obtaining Cabling and Terminators

There are two main types of cabling you can use: microphone cable and data-grade cable. Although pin-compatible microphone cable is suitable for small-scale configurations, data cable is recommended, especially for longer cable runs. Data cable is designed to carry a higher-quality signal with less susceptibility to electromagnetic interference. Belden® 9841 data-grade cabling is highly recommended for use with Trackspot fixtures.

Constructing Cabling

If you need to construct cabling, you must use a shielded, two-conductor cable with a male 3-pin XLR connector on one end and a female 3-pin XLR connector on the other end. Pin one is the shield (ground), pin two is the data complement (negative), and pin three is the data true (positive) (see Figure 2-5). For more information on cabling and connector specifications, see "Specifications" on page Intro-4.

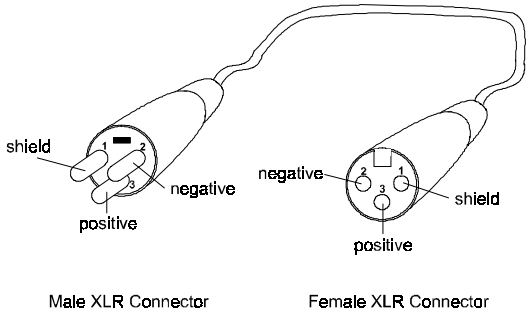

Figure 2-5. XLR 3-pin connectors

You should test each cable with a voltage/ohm meter (VOM) to verify correct polarity and to make sure that the negative and positive pins are not grounded or shorted to the shield or to each other. Also, make sure that pin 1 is shielded.

Caution: Do not use the ground lug on the XLR connectors. Do not connect the shield to ground or allow contact to ground. Grounding the shield could cause a ground loop and/or erratic behavior.

Constructing Terminators

If you chose to use standard analog control, you do not need to attach a terminator to the last device on each link. However, for all other control modes, the last device on each link must have a 120 ohm, 1/4 watt (minimum) terminator attached to its Data Out connector.

You can construct terminators by following the instructions below:

1. Obtain a male XLR connector.
2. Disassemble the connector.
3. Solder a 120 ohm resistor, minimum of 1/4 watt, between pins 2 and 3 (see Figure 2-6).
4. Reassemble the XLR connector.
5. Install the terminator in the Data Out connector of the last fixture in the link.

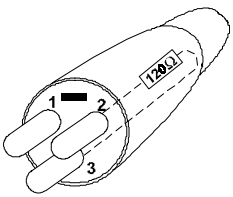

Figure 2-6. Data cable terminator

Linking the Fixtures

The control mode you use (DMX 512 protocol, LWR protocol, standard analog, or stand alone operation) determines how you will link the fixtures to a controller with data cabling. If you decided to use stand alone operation with no controller, the master fixture serves as the controller for linking purposes. Follow the instructions listed below for link information corresponding to the control mode you chose.

DMX 512 Protocol

If you chose DMX 512 protocol as your control mode, you must operate your fixtures either in low resolution or high resolution. Control options available on your DMX controller will determine whether you can operate your fixtures in low or high resolution mode. For more information, see "Start Channels and Construct Parameters" on page A-1.

To link Trackspot fixtures using a controller with DMX 512 protocol, follow the steps listed below:

1. On all fixtures, set the address switches to the appropriate DMX 512 start channel and set the personality switches to enable either low or high resolution mode.

   For personality and address switch settings in DMX 512 protocol, see Table A-1 on page A-2.

2. Link the DMX 512 controller and fixtures together with 3-pin XLR two-conductor data cables. Plug the male end of a data cable into the Data Out connector on the rear panel of the controller. Plug the female end of that data cable into the Data In connector of the first fixture. Continue using this method to link the remainder of the fixtures together (see Figure 2-7).

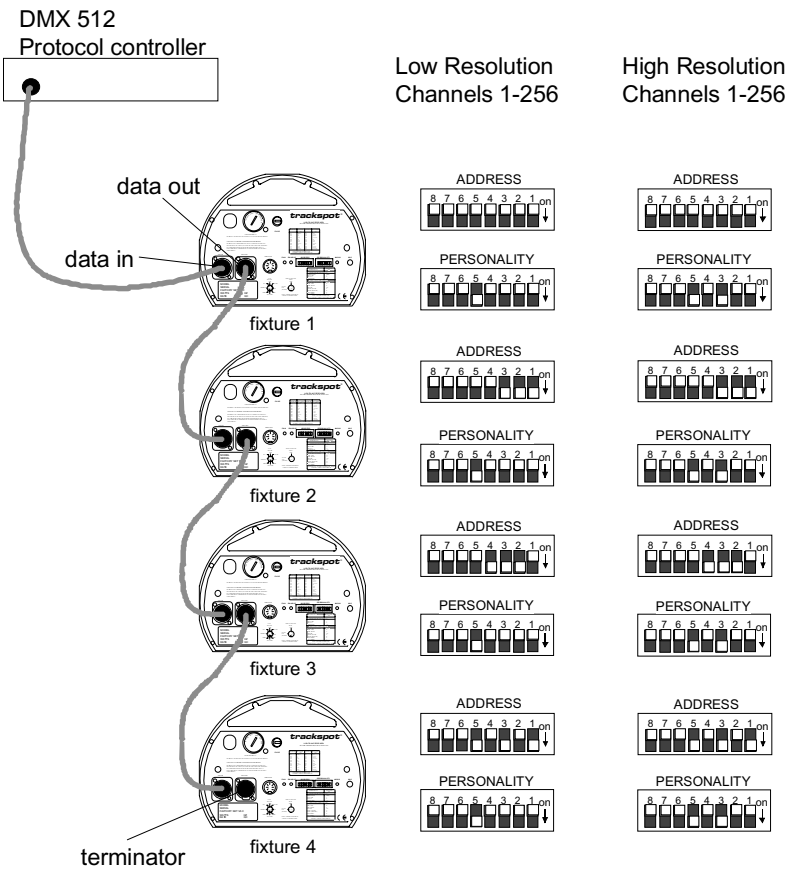

Figure 2-7. Linking fixtures to a DMX 512 protocol controller

LWR Protocol

To link Trackspot fixtures using a controller with LWR protocol, follow the steps listed below:

1. On each fixture, set all personality switches OFF and set the address switches to the fixture's numerical order in the link. See Table C-2 on page C-2 for address switch settings.
2. Link the controller and fixtures together with 3-pin XLR two-conductor data cables. Plug the male end of a data cable into the Data Out connector on the rear panel of the controller. Plug the female end of that data cable into the Data In connector of the first fixture. Continue using this method to link the remainder of the fixtures together (see Figure 2-8).

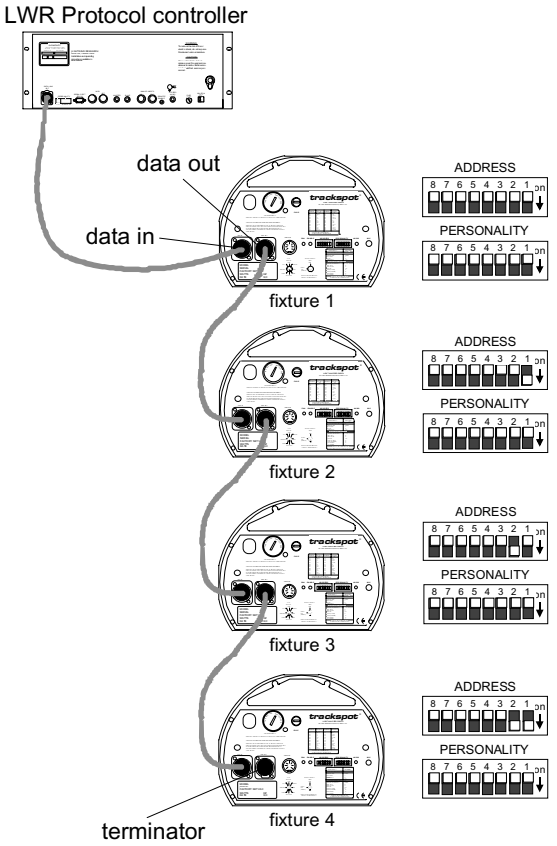

Figure 2-8. Linking fixtures to a LWR protocol controller

Standard Analog

Under standard analog control, Trackspot uses either six or seven analog channels per fixture. The Analog In connector on the rear panel of each fixture has been configured for a spare MSpeed input on pin 1 (see Figure 2-9). If you choose not to set MSpeed (pin 1), the fixture will default to the fastest MSpeed. However, if you want an MSpeed slower than the fastest speed, you must wire a separate line to pin 1. See Table B-2 on page B-5 for standard analog MSpeed times.

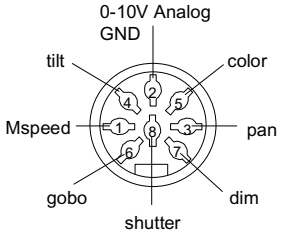

Figure 2-9. Analog

To link Trackspot fixtures to a standard analog controller, follow the steps listed below:

1. On all fixtures, set personality switches 4 and 5 ON and set all address switches OFF.
2. Connect the individual analog outputs from the controller to each fixture's Analog In connector using 8-pin DIN connector cables (see Figure 2-10).

   Note: Using standard analog control, you do not need to terminate the last fixture on the link.

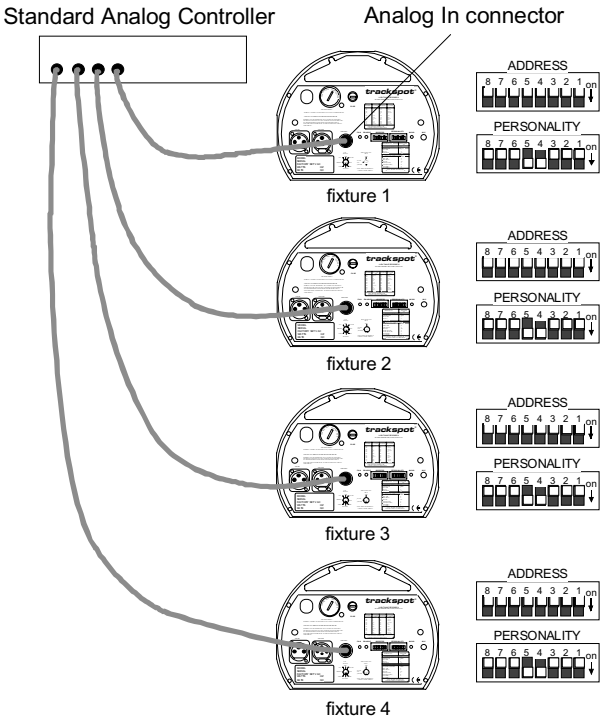

Figure 2-10. Linking fixtures to a standard analog controller

Stand Alone Operation (Master/Slave)

To link Trackspot fixtures in a master/slave configuration, follow the steps listed below:

1. On the designated master fixture, set personality switch 8 ON and set the address switches to equal the total number of Trackspot fixtures (including the master). See Table C-2 on page C-2 for address switch settings.
2. On all slave fixtures, set personality switch 3 ON and set each slave's address switches to the fixture's numerical order in the link). See Table C-2 on page C-2 for address switch settings.
3. Link the master and slave fixtures together with 3-pin XLR data cables. Plug the male end of a data cable into the Data Out connector on the rear panel of the master fixture. Plug the female end of that data cable into the Data In connector of the first slave fixture. Continue using this method to link the remainder of the slave fixtures together (see Figure 2-11).

   Note: For greater control of Trackspot's preset programs in master/slave mode, link a Trackspot Special Analog controller to the master fixture's Analog In connector.

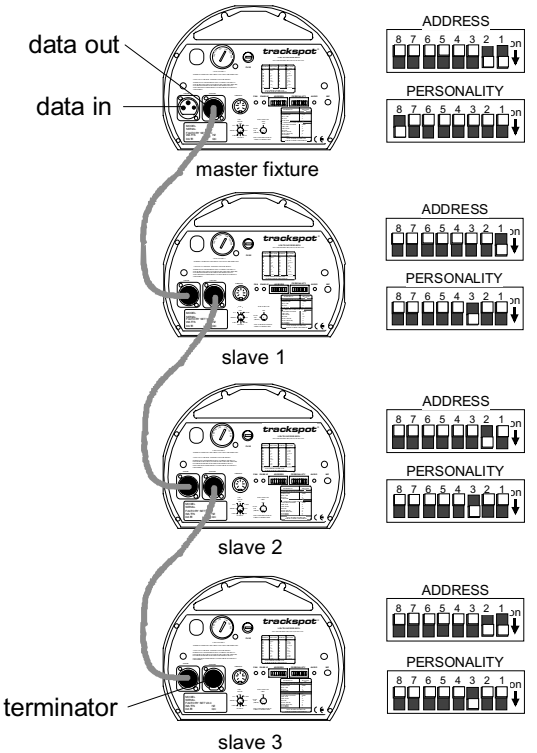

Figure 2-11. Linking master and slave fixtures together

Focusing the Fixture

Once you have mounted and linked the fixtures together, you must focus each fixture. Trackspot has a manual focus which cannot be adjusted by a controller.

To focus the fixture:

1. Place the fixture in setup (focus) mode by setting personality switch 2 ON.
2. Power up the fixture. The fixture performs its homing operation and turns on the lamp. (During the homing operation you will hear clattering sounds as the wheels, shutter, and mirror seek their home position.)
3. Manually swivel the mirror until the beam is pointed at a flat surface you intend to illuminate.
4. Toggle address switch 1 ON and OFF to select a gobo pattern that helps you clearly see the effects of your focusing adjustments.
5. Loosen the lens adjustment thumbscrew and carefully slide the lens tube in and out while watching the beam projected on the flat surface (see Figure 2-12). When the beam has a sharp edge, tighten the thumbscrew to secure the lens tube in place.

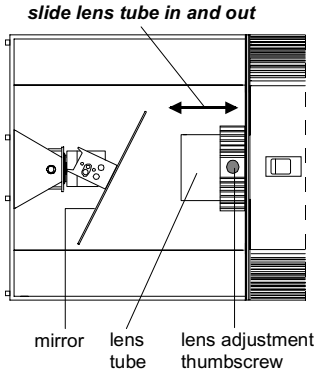

Figure 2-12. Lens tube adjustment

Caution: You must tighten the lens adjustment thumbscrew firmly. The lens tube may fall from the fixture if it is not secured.

Chapter 3
General Maintenance

This section includes information on replacing parts, installing custom gobos, and cleaning your fixture.



Caution: This fixture must be serviced by qualified personnel. The information listed in this section is intended to assist qualified personnel only.

Replacing Parts

This section explains how to remove and replace parts inside the fixture. Please note the warnings under each heading before servicing your fixture.

Replacing the Lamp

You will need:

- Philips® QT 8500 250 W lamp (p/n 55030036)
- protective eyewear
- leather gloves
- isopropyl alcohol wipe(s)



Caution: This equipment is designed for use with a Philips® QT 8500 250 W lamp only. Use of any other type of lamp may be hazardous and may void the warranty.



Warning: An operating, unshielded QT 8500 lamp emits ultraviolet and visible (UV-vis) radiation which could damage eyes and skin. Whenever you are working on or near an exposed QT 8500 lamp, wear protective eye gear. Never look directly at the lamp while the lamp is on.

To replace the lamp:

1. Unplug the fixture. If the fixture has been operating, wait at least 5 minutes for the lamp to cool before handling.
2. Put on your protective eyewear and leather gloves.
3. Turn the fixture over so you can easily access its underside.

4. Remove the fixture's access door by sliding the thumb latch toward the rear of the fixture and lifting the door off (see Figure 3-1).

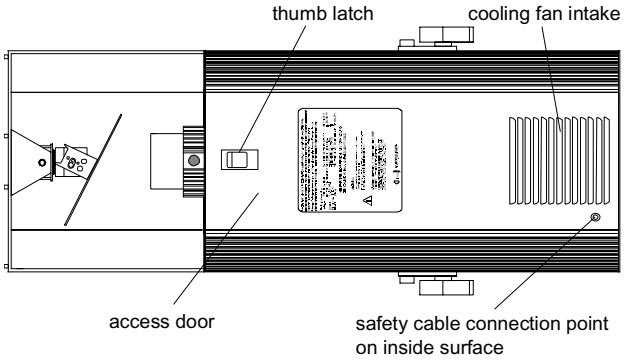

Figure 3-1. Underside of Trackspot

The access door is connected to the fixture by a safety cable. You can leave the door attached, or you can unclip the safety cables to completely remove the door from the fixture.

5. Locate the reflector, lamp socket, and old QT 8500 lamp (see Figure 3-2). To remove the existing QT 8500 lamp, reach inside the reflector and carefully pull the lamp straight out of the socket. Lift the old lamp out of the reflector and discard.

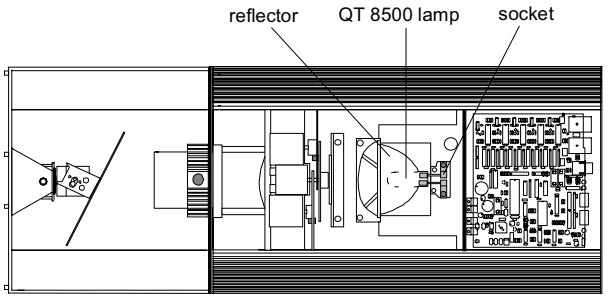

Figure 3-2. Underside of Trackspot with access door removed



Caution: Do not squeeze the lamp glass when removing the old lamp from the socket. Lamp glass may shatter.

6. Open the QT 8500 lamp box and remove the lamp in its plastic wrapper. Carefully open the end of the wrapper so that *only* the two lamp base pins are exposed (see Figure 3-3). Hold the lamp within its wrapper to avoid touching the lamp glass. If you accidently touch the lamp glass, clean it with an isopropyl alcohol wipe.

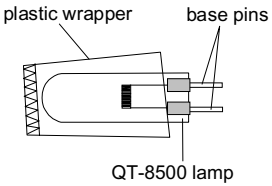

Figure 3-3. Proper way to handle a QT 8500 lamp



Caution: When handling the QT 8500 lamp, avoid contact with the lamp glass. If the lamp glass is soiled by oil or dirt from skin, gloves, etc., clean the cold lamp glass with an alcohol wipe. A soiled lamp could overheat and burst, causing damage to the fixture.

7. Holding the lamp by its wrapper, insert the lamp in the reflector until the base pins extend through the rear opening of the reflector (see Figure 3-4). Continue guiding the lamp until the two base pins are firmly seated in the lamp socket and touching the ceramic stop (see Figure 3-4).

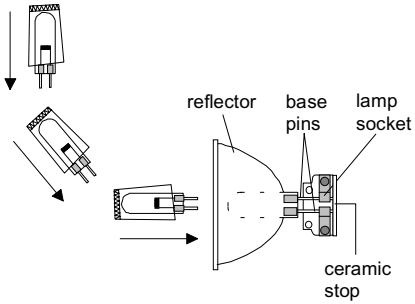

Figure 3-4. Installing a new lamp

Remove and discard the plastic wrapper. You do not need to optimize the lamp because the Trackspot fixture uses a self-aligning lamp socket.

If you disconnected the access door from the fixture, reconnect the safety cable to the access door. Replace the access door and secure the thumb latch. **Do not remove your protective eyewear or leather gloves until the access door is in place**.

Replacing Power Supply Fuses

This section explains how to replace the fuses located on the Trackspot circuit board and rear panel.

You will need:

- flat head screwdriver (to replace the rear panel fuse only)
- replacement fuse (see Table 3-1 for type and sizes)



Caution: **When operating, equipment surfaces may reach temperatures up to 67° C (153° F). Allow 5 minutes for the fixture to cool before handling.**



Warning: **Replace fuses** *only* **with the specified type and rating.**

To replace the fuse:

1. Unplug the fixture. If the fixture has been operating, allow the fixture to cool as described above.
2. Determine which fuse(s) to replace by referring to Table 3-1 below.

Table 3-1. Description and function of Trackspot fuses

Fuse	Location	Type and Rating	Size	Protects	Symptom
F1	circuit board	5.0 A, 250V, Fast Blow Only	5mm x 20 mm	All Motors	No motors work. Yellow Enable LED does not light.
F2	circuit board	.125 A, 250V, Fast Blow Only	5mm x 20 mm	Data Link	No response to data link.
F3	circuit board	.125 A, 250V, Fast Blow Only	5mm x 20 mm	Data Link	No response to data link.
F4	rear panel	4.0 A, 250V, Slow Blow Only	5mm x 20 mm	Main Power Input	No power. Unit appears dead.

3. Replace the fuse(s) with a fuse of the same type and rating.

   To access the fuses on the circuit board, remove the fixture's access door and locate the fuse to be replaced (see Figure 3-5). After replacing the appropriate fuse(s), replace the fixture's access door and secure the thumb latch.

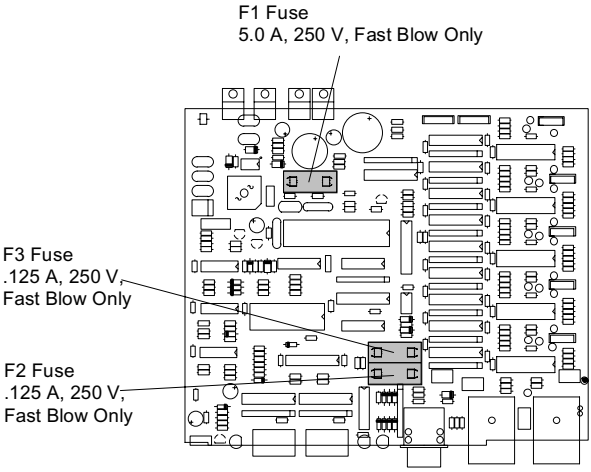

Figure 3-5. Fuse locations on the circuit board

To access the fuse on the rear panel, locate the fuse housing on the rear panel (see Figure 3-6). Insert a flat head screwdriver in the slot on the fuse housing and push in and turn until the fuse housing pops out of the rear panel. After replacing the F4 fuse, insert the fuse housing in the rear panel. Use the screwdriver to push in and turn until the fuse housing is flush with the outer ring.

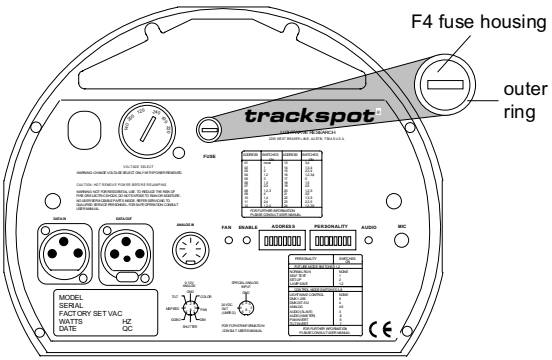

Figure 3-6. Fuse housing location on the rear panel

Replacing the Mirror Assembly

Caution: Use caution when handling broken glass. Glass shards are extremely sharp.

You will need:

- replacement mirror assembly (p/n 80180001) (see Figure 3-7)
- leather gloves
- 7/64-inch allen wrench

To replace the mirror assembly:

1. Unplug the fixture.
2. Put on your leather gloves.
3. Use a 7/64-inch allen wrench to remove the two allen screws that secure the mirror assembly to the motor (see Figure 3-8). Set the screws aside.
4. Remove the old mirror assembly and carefully discard the broken glass.
5. Open the box containing the new mirror and carefully remove the mirror assembly from its foam packaging.
6. Place the new mirror assembly over the spring plunger and motor shaft. Align the screw holes on the new mirror assembly with the screw holes on the motor. Replace the two allen screws. Use the allen wrench to tighten these screws securely.

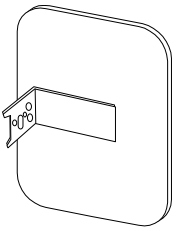

Figure 3-7. Mirror assembly

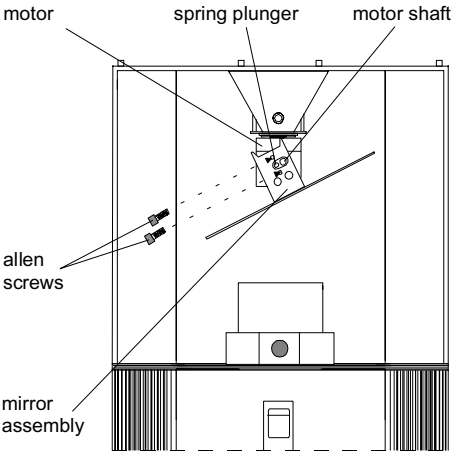

Figure 3-8. Installing a new mirror

Caution: You must tighten the two allen screws firmly. The mirror assembly may fall from the fixture if it is not secured.

Replacing or Installing Custom Gobos

Caution: If the fixture has been operating, allow the fixture at least 5 minutes to cool before handling.

The Trackspot gobo wheel includes one open position for a custom gobo patterns. This allows you to install any gobo pattern you choose. (An optional gobo wheel with nine open positions for custom gobos (p/n 99110017) is also available from your High End Systems dealer/distributor.)

The recommended custom gobo should be made of stainless steel and have a single notch on the edge for easy installation (see Figure 3-9). The custom gobo should be between 0.1mm (0.004 inches) and 0.3mm (0.012 inches) thick with a diameter of 25mm (0.984 inches).

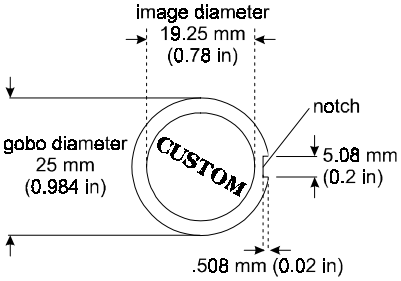

Figure 3-9. Custom gobo

To install a gobo:

1. Unplug the fixture. If the fixture has been operating, allow the fixture to cool as described above.
2. Turn the fixture over so you can easily access its underside.
3. Remove the fixture's access door by sliding the thumb latch toward the rear of the fixture and lifting the door off.

   The access door is connected to the fixture by a safety cable. You can leave the door attached, or you can unclip the safety cables to completely remove the door from the fixture.
4. Locate the gobo wheel and gobo wheel sensor (see Figure 3-10). Handle the gobo wheel carefully. If you accidently bend the gobo wheel, it may rub against and damage the sensor. If the wheel is rubbing against the sensor or any other internal component, see "Adjusting Wheel Clearance" on page 3-12.

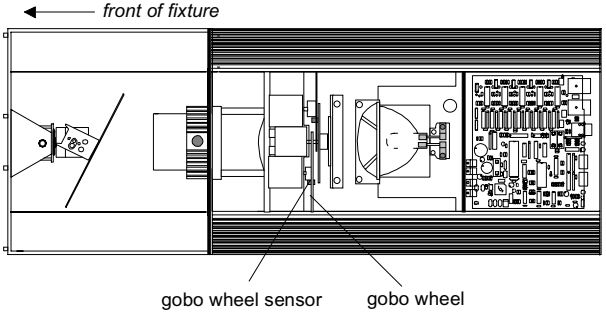

Figure 3-10. Gobo wheel and gobo wheel sensor location

5. Manually rotate the gobo wheel until the custom gobo position is at the top of the wheel. The custom gobo position is identified by the three tabs on the outer edge of the aperture (see Figure 3-11).

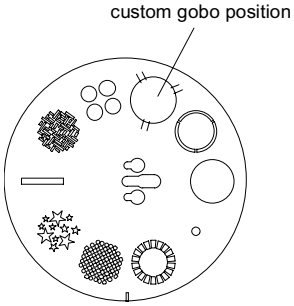

Figure 3-11. Custom gobo aperture in gobo wheel

6. Carefully slide the custom gobo under two of the three tabs. If the gobo has a notch, align the notch with the last tab, press the gobo in place, and turn the gobo until the notch and the tab are no longer aligned. If the gobo does not have a notch as recommended, you must carefully apply pressure to the free side of the custom gobo until it bows enough to slide under the third tab.

   Note: If the custom gobo has letters or numbers, install the gobo so that the information is legible when looking at the gobo from the front of the fixture (see Figure 3-10).

7. Reconnect the safety cable (if applicable), replace the access door and secure the thumb latch.

For more information about Trackspot custom gobos, contact either your High End Systems dealer/distributor, High End System Sales, or visit the High End Systems Web site. For contact information, see the section titled "International Sales" on page ii.

Cleaning Your Trackspot®

How often you clean your Trackspot depends on the environment. If your fixture is used in a dusty/oily environment, you should clean your fixture once a month. A clean fixture helps maintain performance and reliability, since dust and dirt can accumulate and cause loss of light output, overheating, and/or malfunctions.



Cautions: 1) If the fixture has been operating, allow the fixture at least 5 minutes to cool before handling.



2) Use *only* a low-pressure compressed air source (25 psi or lower)

3) To avoid personal injury, do not expose your eyes or skin to the direct jet of compressed air, since it can constitute a serious health hazard. Use suitable protection for your eyes and exposed skin.



Warning: Unplug the fixture before cleaning.

To thoroughly clean your Trackspot, you will need:

- a soft, lint-free cotton cloth
- mild glass cleaning solution
- vacuum
- soft dusting brush or low-pressure compressed air source
- 1/4-inch wrench
- cotton swab

Cleaning the Outer Surfaces

Wipe the outer surfaces with a soft cloth or use a vacuum to remove the dust and dirt. Vacuum dirt from the cooling fan air vents; do not use a blower to clean the fan, since this will force dirt into the fixture.

To clean the fixture's lens and mirror, apply a small amount of mild glass cleaning solution to a clean, soft cloth and *gently* wipe the lens and mirror surfaces.

Note: Make sure to clean both sides of the lens glass. To access the inside of the lens tube glass, loosen the adjustment thumbscrew and remove the lens tube from the fixture. See Figure 2-12 on page 2-17 to locate the lens tube and adjustment thumbscrew.

You must refocus the fixture after removing the lens tube. For information on focusing the fixture, see "Focusing the Fixture" on page 2-17.

Cleaning the Internal Components

Remove the fixture's access door by sliding the thumb latch toward the rear of the fixture and lifting the door off. The access door is connected to the fixture by a safety cable. You can leave the door attached, or you can unclip the safety cable to completely remove the door from the fixture.

Wipe the inner surfaces with a soft cloth or use a vacuum to remove the dust and dirt. If you use a vacuum on the fan, stabilize the fan blades with an object (not your finger!), such as a pen or a screwdriver, to prevent the fan from spinning (see Figure 3-12). Allowing the fan to spin with the force of the compressed air could damage the fan.

Locate the power lens, stepper motors, gobo wheel, color wheel, sensors, shutter, hot mirror, and reflector (see Figure 3-12).

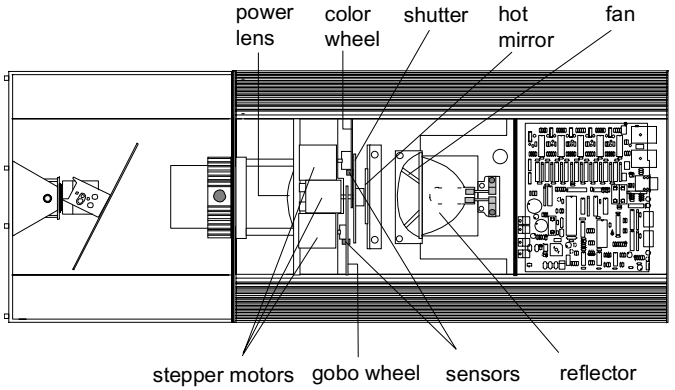

Figure 3-12. Trackspot internal components

Clean the stepper motors, shutter, and reflector with a soft dusting brush or low-pressure compressed air source to remove accumulated dirt and dust.

Clean the hot mirror and power lens with a soft cloth and mild glass cleaning solution.

To clean the color wheel, gobo wheel, and their sensors, you must remove each wheel from the fixture. Follow the procedures below to remove, clean, and reinstall each wheel.

Removing the Color Wheel or Gobo Wheel

For this procedure, you will need a 1/4-inch wrench.

Note: Be careful not to scratch the dichroic filter glass on the wheels by scraping against other objects inside the fixture.

To remove either the color or gobo wheel:

1. Manually rotate the wheel until the two 1/4-inch hex screws are pointed up and the large ends of the keyhole slots are pointed down (see Figure 3-13).

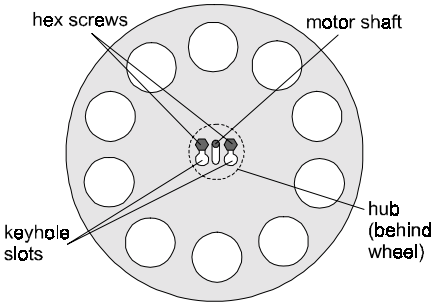

Figure 3-13. Components of the color and gobo wheels

2. Holding the wheel in place, loosen, but *do not remove* these two hex screws using a 1/4-inch wrench.
3. Pull up on the wheel to slide the large ends of the keyhole slot over the hex screw heads, and pull out to remove the wheel (see Figure 3-14).

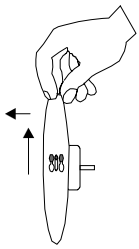

Figure 3-14. Pull wheel up and out to remove

Locate the sensor below the wheel (see Figure 3-15). Gently clean the sensor's groove with either a cotton swab dipped in mild glass cleaner or with compressed air.

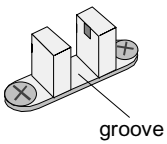

Figure 3-15. Sensor below each wheel

Clean the dichroic filters or gobos on the wheel with a mild glass cleaner and a clean, soft cloth. Make sure the wheel's homing slot is free of dust and dirt (see Figure 3-16).

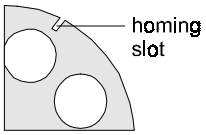

Figure 3-16. Homing slot on wheel

Reinstalling the Color Wheel or Gobo Wheel

1. Hold the wheel so that the large ends of the keyhole slots are pointed down and the adhesive used to hold glass to the wheel is facing away from the lamp.

   Dichroic glass is attached to both the gobo wheel and color wheel. On one side of the wheel, you can clearly see the adhesive used to attach the glass. On the other side of the wheel, you see only the glass (no adhesive).



Caution: You must replace the wheel so that the adhesive used to hold the glass to the wheel is facing away from the lamp, otherwise, the heat from the lamp could melt the adhesive and cause the glass to fall from the wheel.

2. Place the bottom of the wheel in the sensor groove. Carefully slip the large ends of the keyhole slots over the hex screws. Push the wheel in then down until the hex screws are in the narrow ends of the keyhole slots.
3. Tighten the hex screws while holding the wheel in place. Tighten the screws only until they are snug; *do not overtighten*.
4. Manually rotate the wheel and note any contact between the wheel and its sensor. If there is contact, remove the wheel and lay it on a flat surface to determine if the wheel is warped. If the wheel is warped, contact High End Systems customer service (see "Getting Help" on page Intro-3). If the wheel is not warped, adjust the wheel's clearance to the sensor. For more information, see "Adjusting Wheel Clearance" on page 2-12.

When you have successfully cleaned the fixture's internal components, reconnect the safety cable (if applicable), replace the access door, and secure the thumb latch.

Adjusting Wheel Clearance

Adjust the wheel clearance to prevent either the color or gobo wheel from making contact with its sensor or any other object in the Trackspot fixture.

Before you adjust the wheel clearance, remove the wheel and lay it on a flat surface to determine if the wheel is warped (see "Removing the Color Wheel or Gobo Wheel" on page 3-10.) If the wheel is warped, contact High End Systems customer service (see "Getting Help" on page Intro-3).

If the wheel is not warped, reinstall the wheel and follow the procedure below to adjust the wheel clearance (see "Reinstalling the Color Wheel or Gobo Wheel" on page 3-12.)

You will need:

- 7/64 inch allen wrench (preferably with a long handle)

To adjust the wheel clearance:

1. Unplug the fixture. If the fixture has been operating, allow the fixture to cool for at least 5 minutes before handling.
2. Remove the fixture's access door and locate the color and gobo wheels (see Figure 3-17).
3. Manually rotate the wheel and note where the wheel contacts any other object.
4. Loosen, *but do not remove*, the two allen screws located on the wheel's hub (see Figure 3-17).

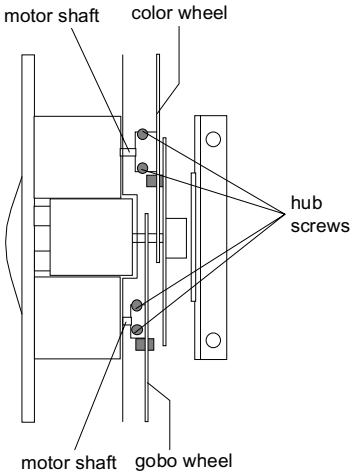

Figure 3-17. Allen screws on the color wheel and gobo wheel hubs

5. Press on the center of the wheel to move the hub back and forth on the motor shaft. Position the wheel so that it does not make contact with its sensor or any other object as it turns.
6. Tighten the allen screws while holding the wheel in place. Tighten the screws only until they are snug; *do not overtighten*.

When you have successfully adjusted the wheel clearance, reconnect the safety cable (if applicable), replace the access door, and secure the thumb latch.

Chapter 4
Troubleshooting

This chapter lists typical symptoms and solutions for problems you might experience when using your Trackspot. If you need additional help, or if the problem you are experiencing is not listed in this section, contact your High End Systems dealer/distributor or High End Systems Customer Service in one of the ways shown in the section titled "Getting Help" on page Intro-3.



Caution: This fixture must be serviced by qualified personnel. The information listed in this section is intended to assist qualified personnel only.

Table 4-1. Symptoms and Solutions

Problem	Possible Cause	Possible Solution
Fixture does not work: no LEDs, fans, lamp, or other functionality (fixture appears dead	No input power	a. Verify the fixture is plugged into a working power supply. b. Replace the rear panel fuse. For more information, see "Replacing Power Supply Fuses" on page 3-4.
Lamp will not strike	Bad lamp	Replace lamp with new or verified working lamp.
	Incorrect voltage setting	Make sure the fixture is set for the same voltage as the power outlet. For more information, see "Selecting the Voltage" on page 1-3.
	Lamp not fully seated in socket.	Make sure the lamp base pins are correctly inserted in the socket and touch the ceramic stop. For more information, see "Replacing the Lamp" on page 3-1.
Light output is low, beam edge is very soft, images fuzzy	Dichroic filters, mirror, reflector, and/or lenses dirty.	Clean the lens tube, mirror, reflector, and dichroic filter glass. For more information, see "Cleaning the Outer Surfaces" on page 3-9 and "Removing the Color Wheel or Gobo Wheel" on page 3-10.

Table 4-1. Symptoms and Solutions

Problem	Possible Cause	Possible Solution
Lamp shuts OFF	Fixture is overheated. (Another symptom: Fan LED will flash four times, pause, and repeat.)	a. Check the air vents for restricted air flow due to dust and dirt. b. Clean the fan and verify the fan is working. For more information, see “Cleaning the Outer Surfaces” on page 3-9. c. Reduce the ambient temperature around your fixture. Maximum ambient temperature for Trackspot is 50° C (122° F). If your fixture overheats, you must unplug the fixture, wait for the fixture to cool, then reconnect the power supply to reset the fixture.
	Aging lamp	Replace lamp with a new or verified working lamp. For more information, see “Replacing the Lamp” on page 3-1.
Error tone (two level beeping) after the fixture homes	Incorrect personality switch setting.	Verify that the personality switch setting you chose for your control mode is correct. For more information, see “Personality Switches” on page 2-3.
	Gobo or color wheel not homing.	a. Clean the sensor and homing slot. For more information, see “Removing the Color Wheel or Gobo Wheel” on page 3-10. b. Manually rotate the wheel and note any contact between the wheel and any other internal component. If the wheel is warped, contact High End Systems customer service (see “Getting Help” on page Intro-3). If the wheel is not warped, adjust the wheel clearance. For more information, see “Adjusting Wheel Clearance” on page 3-12.

Table 4-1. Symptoms and Solutions

Problem	Possible Cause	Possible Solution
Yellow Enable LED or green Audio LED does not illuminate	The voltage select switch is not seated correctly.	Make sure the voltage select switch is flush with the outer ring. For more information, see "Selecting the Voltage" on page 1-3.
Fixture does not respond to data	Faulty XLR cable or incorrect cable linking.	a. Replace the XLR cables with new or known working cables. b. Verify that the XLR cables have been correctly linked to the fixture. For more information, see "Linking the Fixtures" on page 2-12.
	There is no controller attached to the link, or the controller is not generating any output.	Verify that the controller is correctly attached to the link (if applicable) and that the controller is able to generate output to a known working fixture. For more information, see "Specifications" on page Intro-4 or "Linking the Fixtures" on page 2-12.
	Incorrect personality setting.	a. Verify that the personality switch settings you chose for your control mode are correct. b. Verify that the address switch settings you chose for the fixture order or starting channel are correct. For more information, see "Enabling the Control Mode" on page 2-3.
	A fuse is blown.	Replace the F2 and/or F3 fuses on the circuit board. For more information, see "Replacing Power Supply Fuses" on page 3-4.
Color wheel or gobo wheel is not centered in the beam or is in the wrong position	Sensor or homing slot is dirty.	Clean the sensor and homing slot. For more information, see "Removing the Color Wheel or Gobo Wheel" on page 3-10.
	Wheel is rubbing against sensor.	If the wheel is warped, contact High End Systems customer service (see "Getting Help" on page Intro-3). If the wheel is not warped, adjust the wheel clearance. For more information, see "Adjusting Wheel Clearance" on page 3-12.

Table 4-1. Symptoms and Solutions

Problem	Possible Cause	Possible Solution
None of the motors work and the yellow Enable LED does not illuminate	A fuse is blown.	Replace the F4 rear panel fuse and the F1 circuit board fuse. For more information, see “Replacing Power Supply Fuses” on page 3-4.

Appendix A
DMX Control of Trackspot®

Under DMX 512 protocol, each Trackspot fixture uses a block of seven contiguous DMX channels for a total of 72 fixtures per link. Although you can control Trackspot from any DMX starting channel you choose, that starting channel must not interfere with another fixture's channel block.

The tables below assume that all Trackspot fixtures will be assigned to the same link, one after another. Keep in mind, however, that if you mix different devices on the same link, those devices will have different channel blocks that may overlap the 7-channel sequence listed below.

Note: The values displayed in the tables in this appendix may vary slightly depending on your controller's rounding convention.

Start Channels and Construct Parameters

If you chose DMX 512 protocol as your control mode, you must operate your Trackspot fixture(s) either in low resolution or high resolution. Control options available on your DMX controller will determine whether you can operate your fixtures in low or high resolution mode.

Low Resolution Mode

Low resolution mode is used with DMX controllers that do not support color or gobo fader and spin effects. There are fewer color and gobo features available in low resolution mode.

High Resolution Mode

High resolution mode has more construct parameters and is intended for DMX controllers with more accurate faders or direct numerical control of each dim channel. In high resolution mode, the color fader and gobo fader effects include half colors, oscillating colors, color spin effects, and gobo spin effects.

After determining which DMX 512 mode you will operate in, see Table A-1 for information such as DMX starting channels and address and personality switch settings in both high and low resolution modes. For construct parameters available in low resolution mode, see Table A-2. For construct parameters available in high resolution mode, see Table A-3.

Table A-1. Starting channels in 7-channel DMX 512 protocol

Numerical Order In Link	Address DIP Switches ON	Personality DIP Switches ON		DMX Starting Channel
		Low Resolution	High Resolution	
Fixture 1	none	5	3, 5	001
Fixture 2	1, 2, 3	5	3, 5	008
Fixture 3	2, 3, 4	5	3, 5	015
Fixture 4	1, 3, 5	5	3, 5	022
Fixture 5	3, 4, 5	5	3, 5	029
Fixture 6	1, 2, 6	5	3, 5	036
Fixture 7	2, 4, 6	5	3, 5	043
Fixture 8	1, 5, 6	5	3, 5	050
Fixture 9	4, 5, 6	5	3, 5	057
Fixture 10	1, 2, 3, 4, 5, 6	5	3, 5	064
Fixture 11	2, 3, 7	5	3, 5	071
Fixture 12	1, 3, 4, 7	5	3, 5	078
Fixture 13	3, 5, 7	5	3, 5	085
Fixture 14	1, 2, 4, 5, 7	5	3, 5	092
Fixture 15	2, 6, 7	5	3, 5	099
Fixture 16	1, 4, 6, 7	5	3, 5	106
Fixture 17	5, 6, 7	5	3, 5	113
Fixture 18	1, 2, 3, 5, 6, 7	5	3, 5	120
Fixture 19	2, 3, 4, 5, 6, 7	5	3, 5	127
Fixture 20	1, 3, 8	5	3, 5	134
Fixture 21	3, 4, 8	5	3, 5	141
Fixture 22	1, 2, 5, 8	5	3, 5	148
Fixture 23	2, 4, 5, 8	5	3, 5	155
Fixture 24	1, 6, 8	5	3, 5	162
Fixture 25	4, 6, 8	5	3, 5	169
Fixture 26	1, 2, 3, 4, 6, 8	5	3, 5	176
Fixture 27	2, 3, 5, 6, 8	5	3, 5	183
Fixture 28	1, 3, 4, 5, 6, 8	5	3, 5	190
Fixture 29	3, 7, 8	5	3, 5	197
Fixture 30	1, 2, 4, 7, 8	5	3, 5	204
Fixture 31	2, 5, 7, 8	5	3, 5	211
Fixture 32	1, 4, 5, 7, 8	5	3, 5	218
Fixture 33	6, 7, 8	5	3, 5	225
Fixture 34	1, 2, 3, 6, 7, 8	5	3, 5	232
Fixture 35	2, 3, 4, 6, 7, 8	5	3, 5	239
Fixture 36	1, 3, 5, 6, 7, 8	5	3, 5	246*
Fixture 37	none	4	3, 4	257

Table A-1. Starting channels in 7-channel DMX 512 protocol

Numerical Order In Link	Address DIP Switches ON	Personality DIP Switches ON		DMX Starting Channel
		Low Resolution	High Resolution	
Fixture 38	1, 2, 3	4	3, 4	264
Fixture 39	2, 3, 4	4	3, 4	271
Fixture 40	1, 3, 5	4	3, 4	278
Fixture 41	3, 4, 5	4	3, 4	285
Fixture 42	1, 2, 6	4	3, 4	292
Fixture 43	2, 4, 6	4	3, 4	299
Fixture 44	1, 5, 6	4	3, 4	306
Fixture 45	4, 5, 6	4	3, 4	313
Fixture 46	1, 2, 3, 4, 5, 6	4	3, 4	320
Fixture 47	2, 3, 7	4	3, 4	327
Fixture 48	1, 3, 4, 7	4	3, 4	334
Fixture 49	3, 5, 7	4	3, 4	341
Fixture 50	1, 2, 4, 5, 7	4	3, 4	348
Fixture 51	2, 6, 7	4	3, 4	355
Fixture 52	1, 4, 6, 7	4	3, 4	362
Fixture 53	5, 6, 7	4	3, 4	369
Fixture 54	1, 2, 3, 5, 6, 7	4	3, 4	376
Fixture 55	2, 3, 4, 5, 6, 7	4	3, 4	383
Fixture 56	1, 3, 8	4	3, 4	390
Fixture 57	3, 4, 8	4	3, 4	397
Fixture 58	1, 2, 5, 8	4	3, 4	404
Fixture 59	2, 4, 5, 8	4	3, 4	411
Fixture 60	1, 6, 8	4	3, 4	418
Fixture 61	4, 6, 8	4	3, 4	425
Fixture 62	1, 2, 3, 4, 6, 8	4	3, 4	432
Fixture 63	2, 3, 5, 6, 8	4	3, 4	439
Fixture 64	1, 3, 4, 5, 6, 8	4	3, 4	446
Fixture 65	3, 7, 8	4	3, 4	453
Fixture 66	1, 2, 4, 7, 8	4	3, 4	460
Fixture 67	2, 5, 7, 8	4	3, 4	467
Fixture 68	1, 4, 5, 7, 8	4	3, 4	474
Fixture 69	6, 7, 8	4	3, 4	481
Fixture 70	1, 2, 3, 6, 7, 8	4	3, 4	488
Fixture 71	2, 3, 4, 6, 7, 8	4	3, 4	495
Fixture 72	1, 3, 5, 6, 7, 8	4	3, 4	502*

*Note: Channels 253 - 256 and channels 509 - 512 cannot be used due to Trackspot's 7-channel block structure.

Table A-2. Construct parameters in DMX 512 low resolution mode

DMX Channel	Function	Low Resolution Parameters	Decimal	Percent	Hex
1	Pan	Pan Positioning, 8 bit	0-255	0-100	00-ffh
2	Tilt	Tilt Positioning, 8 bit	0-255	0-100	00-ffh
3	Color Wheel	open / color 1 color 2 color 3 color 4 color 5 color 6 color 7 color 8 color 9 color 10	0 32 54 79 110 138 160 200 210 240	0 13 21 31 43 55 63 78 82 94	0 20 36 4F 6E 8A A0 C8 D2 F0
4	Gobo Wheel	open / gobo 1 gobo 2 gobo 3 gobo 4 gobo 5 gobo 6 gobo 7 gobo 8 gobo 9 gobo 10	0 32 54 79 110 138 160 200 210 240	0 13 21 31 43 55 63 78 82 94	0 20 36 4F 6E 8A A0 C8 D2 F0
5	Shutter	closed open strobe 1 strobe 2 strobe 3 strobe 4 strobe 5 strobe 6 strobe 7 closed open	0 26 51 77 102 128 153 179 204 230 242	0 10 20 30 40 50 60 70 80 90 95	0 1A 33 4D 66 80 99 B3 CC E6 F2
6	Dimmer	closed-open	0-255	0-100	00-ffh
7	MSpeed	slowest-fastest	0-255	0-100	00-ffh

Table A-3. Construct parameters in DMX 512 high resolution mode

DMX Channel	Function	High Resolution Parameters	Decimal	Percent	Hex
1	Pan	Pan Positioning, 8 bit	0-255	0-100	00-ffh
2	Tilt	Tilt Positioning, 8 bit	0-255	0-100	00-ffh
3	Color Wheel	open / color 1	0	0	0
		forward color spin 8	8	3	8
		forward color spin 7	15	6	F
		forward color spin 6	22	9	16
		forward color spin 5	30	12	1E
		forward color spin 4	36	14	24
		forward color spin 3	43	17	2B
		forward color spin 2	51	20	33
		forward color spin 1	59	23	3B
		reverse color spin 8	64	25	40
		reverse color spin 7	71	28	47
		reverse color spin 6	79	31	4F
		reverse color spin 5	87	34	57
		reverse color spin 4	94	37	5E
		reverse color spin 3	99	39	63
		reverse color spin 2	107	42	6B
		reverse color spin 1	112	44	70
		half color 2	120	47	78
		color 2	128	50	80
		half color 3	133	52	85
		color 3	140	55	8C
		half color 4	148	58	94
		color 4	156	61	9C
		half color 5	163	64	A3
		color 5	168	66	A8
		half color 6	176	69	B0
		color 6	184	72	B8
		half color 7	191	75	BF
		color 7	196	77	C4
		half color 8	204	80	CC
		color 8	212	83	D4
		half color 9	219	86	DB
		color 9	224	88	E0
		half color 10	232	91	E8
		color 10	240	94	F0
		half color 1	247	97	F7
		open / color 1	252	99	FC

Table A-3. Construct parameters in DMX 512 high resolution mode

DMX Channel	Function	High Resolution Parameters	Decimal	Percent	Hex
4	Gobo Wheel	open / gobo 1	0	0	0
		forward gobo spin 7	10	4	A
		forward gobo spin 6	18	7	12
		forward gobo spin 5	28	11	1C
		forward gobo spin 4	38	15	26
		forward gobo spin 3	46	18	2E
		forward gobo spin 2	56	22	38
		forward gobo spin 1	64	25	40
		reverse gobo spin 7	82	32	52
		reverse gobo spin 6	92	36	5C
		reverse gobo spin 5	99	39	63
		reverse gobo spin 4	110	43	6E
		reverse gobo spin 3	117	46	75
		reverse gobo spin 2	128	50	80
		reverse gobo spin 1	135	53	87
		gobo 2	155	61	9B
		gobo 3	179	70	B3
		gobo 4	191	75	BF
		gobo 5	201	79	C9
		gobo 6	209	82	D1
		gobo 7	217	85	D9
		gobo 8	227	89	E3
		gobo 9	235	92	EB
		gobo 10	245	96	F5
		open / gobo 1	252	99	FC
5	Shutter	closed	0	0	0
		open	26	10	1A
		strobe 1	51	20	33
		strobe 2	77	30	4D
		strobe 3	102	40	66
		strobe 4	128	50	80
		strobe 5	153	60	99
		strobe 6	179	70	B3
		strobe 7	204	80	CC
		closed	230	90	E6
		open	242	95	F2
6	Dimmer	closed-open	0-255	0-100	00-ffh
7	MSpeed	slowest-fastest	0-255	0-100	00-ffh

Appendix B
Trackspot® MSpeed Times

Use this appendix to determine the MSpeed (motor) movement times in seconds. Follow the listing in the tables below for the control mode you chose to operate your fixture, either DMX 512 or LWR protocol.

DMX 512 Protocol MSpeed Times

The type of controller you use determines which Value column is pertinent to your MSpeed Time. If you are using a controller that shows MSpeed in numeric values, use the Value (num) column. If you are using a controller that controls MSpeed with a fader, use the Value (%) column.

Note: The values displayed in the Value columns may vary slightly depending on your controller's rounding conventions.

Table B-1. DMX 512 protocol MSpeed times

Value (%)	Value (num)	Time (seconds)	Value (%)	Value (num)	Time (seconds)
100	255	0.15	92	235	0.15
100	254	0.15	92	234	0.15
99	253	0.15	91	233	0.15
99	252	0.15	91	232	0.15
98	251	0.15	91	231	0.15
98	250	0.15	90	230	0.15
98	249	0.15	90	229	0.15
97	248	0.15	89	228	0.15
97	247	0.15	89	227	0.15
96	246	0.15	89	226	0.15
96	245	0.15	88	225	0.15
96	244	0.15	88	224	0.15
95	243	0.15	87	223	0.15
95	242	0.15	87	222	0.15
95	241	0.15	87	221	0.15
94	240	0.15	86	220	0.15
94	239	0.15	86	219	0.15
93	238	0.15	85	218	0.15
93	237	0.15	85	217	0.15
93	236	0.15	85	216	0.15

Table B-1. DMX 512 protocol MSpeed times

Value (%)	Value (num)	Time (seconds)	Value (%)	Value (num)	Time (seconds)
84	215	0.15	69	177	2.09
84	214	0.15	69	176	2.09
84	213	0.15	69	175	2.46
83	212	0.15	68	174	2.46
83	211	0.15	68	173	2.86
82	210	0.15	67	172	2.86
82	209	0.15	67	171	3.30
82	208	0.15	67	170	3.30
81	207	0.15	66	169	3.76
81	206	0.15	66	168	3.76
80	205	0.15	65	167	4.26
80	204	0.15	65	166	4.26
80	203	0.15	65	165	4.79
79	202	0.15	64	164	4.79
79	201	0.15	64	163	5.35
78	200	0.15	64	162	5.35
78	199	0.15	63	161	5.94
78	198	0.15	63	160	5.94
77	197	0.17	62	159	6.57
77	196	0.17	62	158	6.57
76	195	0.22	62	157	7.22
76	194	0.22	61	156	7.22
76	193	0.34	61	155	7.91
75	192	0.34	60	154	7.91
75	191	0.41	60	153	8.64
75	190	0.41	60	152	8.64
74	189	0.55	59	151	9.39
74	188	0.55	59	150	9.39
73	187	0.73	58	149	10.17
73	186	0.73	58	148	10.17
73	185	0.94	58	147	10.99
72	184	0.94	57	146	10.99
72	183	1.18	57	145	11.84
71	182	1.18	56	144	11.84
71	181	1.45	56	143	12.72
71	180	1.45	56	142	12.72
70	179	1.76	55	141	13.64
70	178	1.76	55	140	13.64

Table B-1. DMX 512 protocol MSpeed times

Value (%)	Value (num)	Time (seconds)	Value (%)	Value (num)	Time (seconds)
55	139	14.58	40	101	38.65
54	138	14.58	39	100	38.65
54	137	15.56	39	99	40.23
53	136	15.56	38	98	40.23
53	135	16.57	38	97	41.85
53	134	16.57	38	96	41.85
52	133	17.61	37	95	43.50
52	132	17.61	37	94	43.50
51	131	18.69	36	93	45.19
51	130	18.69	36	92	45.19
51	129	19.79	36	91	46.90
50	128	19.79	35	90	46.90
50	127	20.93	35	89	48.65
49	126	20.93	35	88	48.65
49	125	22.10	34	87	50.43
49	124	22.10	34	86	50.43
48	123	23.30	33	85	52.24
48	122	23.30	33	84	52.24
47	121	24.54	33	83	54.09
47	120	24.54	32	82	54.09
47	119	25.80	32	81	55.96
46	118	25.80	31	80	55.96
46	117	27.10	31	79	57.87
45	116	27.10	31	78	57.87
45	115	28.44	30	77	59.81
45	114	28.44	30	76	59.81
44	113	29.80	29	75	61.78
44	112	29.80	29	74	61.78
44	111	31.19	29	73	63.78
43	110	31.19	28	72	63.78
43	109	32.62	28	71	65.82
42	108	32.62	27	70	65.82
42	107	34.08	27	69	67.89
42	106	34.08	27	68	67.89
41	105	35.57	26	67	69.99
41	104	35.57	26	66	69.99
40	103	37.09	25	65	72.12
40	102	37.09	25	64	72.12

Table B-1. DMX 512 protocol MSpeed times

Value (%)	Value (num)	Time (seconds)	Value (%)	Value (num)	Time (seconds)
25	63	74.28	12	31	113.28
24	62	74.28	12	30	113.28
24	61	76.48	11	29	115.98
24	60	76.48	11	28	115.98
23	59	78.71	11	27	118.73
23	58	78.71	10	26	118.73
22	57	80.97	10	25	121.50
22	56	80.97	9	24	121.50
22	55	83.26	9	23	124.31
21	54	83.26	9	22	124.31
21	53	85.59	8	21	127.14
20	52	85.59	8	20	127.14
20	51	87.95	7	19	130.01
20	50	87.95	7	18	130.01
19	49	90.33	7	17	132.91
19	48	90.33	6	16	132.91
18	47	92.76	6	15	135.85
18	46	92.76	5	14	135.85
18	45	95.21	5	13	138.82
17	44	95.21	5	12	138.82
17	43	97.69	4	11	141.81
16	42	97.69	4	10	141.81
16	41	100.21	4	9	144.84
16	40	100.21	3	8	144.84
15	39	102.76	3	7	147.90
15	38	102.76	2	6	147.90
15	37	105.34	2	5	151.00
14	36	105.34	2	4	151.00
14	35	107.95	1	3	154.13
13	34	107.95	1	2	154.13
13	33	110.60	0	1	157.28
13	32	110.60	0	0	157.28

LWR Protocol MSpeed Times

The table below lists MSpeed times in seconds for a numerical speed range of 0 to 99.

Table B-2. LWR protocol MSpeed times

Speed #	Time (seconds)	Speed #	Time (seconds)
0	157.28	34	67.89
1	154.13	35	65.82
2	151.00	36	63.78
3	147.90	37	61.78
4	144.84	38	59.81
5	141.81	39	57.87
6	138.82	40	55.96
7	135.85	41	54.09
8	132.91	42	52.20
9	130.01	43	50.43
10	127.14	44	48.65
11	124.31	45	46.90
12	121.50	46	45.19
13	118.73	47	43.50
14	115.98	48	41.85
15	113.28	49	40.23
16	110.60	50	38.65
17	107.95	51	37.09
18	105.34	52	35.57
19	102.76	53	34.08
20	100.21	54	32.62
21	97.69	55	31.19
22	95.21	56	29.80
23	92.76	57	28.44
24	90.33	58	27.10
25	87.95	59	25.80
26	85.59	60	24.54
27	83.26	61	23.30
28	80.97	62	22.10
29	78.71	63	20.93
30	76.48	64	19.79
31	74.28	65	18.69
32	72.12	66	17.61
33	69.99	67	16.57

Table B-2. LWR protocol MSpeed times

Speed #	Time (seconds)	Speed #	Time (seconds)
68	15.56	84	3.76
69	14.58	85	3.30
70	13.64	86	2.86
71	12.72	87	2.46
72	11.84	88	2.09
73	10.99	89	1.76
74	10.17	90	1.45
75	9.39	91	1.18
76	8.64	92	0.94
77	7.91	93	0.73
78	7.22	94	0.55
79	6.57	95	0.41
80	5.94	96	0.34
81	5.35	97	0.22
82	4.79	98	0.17
83	4.26	99	0.15

Appendix C
Personality and Address Switch Settings

Personality Switch Settings

Table C-1. Personality switch settings for all control modes and operating modes

Mode	Personality Switches ON
Self Test	1
Set Up (Focus)	2
Lamp Save	1, 2
Auto Dim Override (LWR)	3, 4, 5
Pan Invert	6
Tilt Invert	7
Low Resolution DMX 512 mode (channels 1-256)	5
Low Resolution DMX-512 mode (channels 257-512)	4
High Resolution DMX 512 mode (channels 1-256)	3, 5
High Resolution DMX 512 mode (channels 257-512)	3, 4
LWR protocol and normal run	All switches OFF
Standard Analog	4, 5
Stand Alone (Audio Master)	8
Stand Alone (Audio Slave)	3

C

Address Switch Settings

Address switch settings for LWR protocol and master/slave mode are listed below. Address switch settings for DMX 512 protocol are listed in Table A-1 on page A-2. When using standard analog control, set all address switches OFF on all fixtures.

Table C-2. Address switch settings for LWR protocol and master/slave mode

Fixture Number	Address Switches ON
01	All switches OFF (used with LWR protocol only)
02	1
03	2
04	1, 2
05	3
06	1, 3
07	2, 3
08	1, 2, 3
09	4
10	1, 4
11	2, 4
12	1, 2, 4
13	3, 4
14	1, 3, 4
15	2, 3, 4
16	1, 2, 3, 4
17	5,
18	1, 5
19	2, 5
20	1, 2, 5
21	3, 5
22	1, 3, 5
23	2, 3, 5
24	1, 2, 3, 5

Appendix D
Important Safety Information

English Version

WARNING: For Continued Protection Against Fire

1. This equipment is designed for use with Philips type QT 8500, 250 watt lamp only. Use of any other type lamp may be hazardous and may void the warranty.
2. Do not mount on a flammable surface.
3. Maintain minimum distance of 1.0 meter (3.28 feet) from combustible materials.
4. Replace fuses only with the specified type and rating.
5. Observe minimum distance to lighted objects of 1.0 meter (3.28 feet).

WARNING: For Continued Protection Against Electric Shock

1. If this equipment was received without a line cord plug, attach the appropriate line cord plug according to the following code:
    - brown–live
    - blue–neutral
    - green/yellow–earth
2. As the colors of the cores in the mains lead of this equipment may not correspond with the colored markings identifying the terminals in your plug, proceed as follows:
    - the core which is colored green and yellow must be connected to the terminal in the plug which is marked with the letter "E" or by the earth symbol ⏚, or colored green or green and yellow.
    - the core which is colored blue must be connected to the terminal which is marked with the letter N or colored black.
    - the core which is colored brown must be connected to the terminal which is marked with the letter L or colored red.
3. This equipment must be earthed.
4. Disconnect power before re-lamping or servicing.
5. Equipment suitable for dry locations only. Do not expose this equipment to rain or moisture.
6. Refer servicing to qualified personnel; no user serviceable parts inside.
7. Class I equipment - this fixture employs a grounded type receptacle and is not intended for connection to a two wire, ungrounded source of supply.

WARNING: For Continued Protection Against Exposure To Excessive Ultraviolet (UV) Radiation

1. Do not operate this equipment without complete lamp enclosure in place or if shields, lenses, or ultraviolet screens are damaged.
2. Change shields, lenses, or ultraviolet screens if they have become visibly damaged to such an extent that their effectiveness is impaired, for example by cracks or deep scratches.
3. Never look directly at the lamp while lamp is on.

WARNING: For Continued Protection Against Injury To Persons

1. Use secondary safety cable when mounting this fixture.
2. Equipment surfaces may reach temperatures up to 67° C (153° F). Allow 5 minutes for cooling before handling.
3. Change the lamp if it becomes damaged or thermally deformed.

Appendice D
IMPORTANTES INFORMATIONS SUR LA SÉCURITÉ

MISE EN GARDE: Pour Une Protection Permanente Contre Les Incendies

1. Cet appareil est conçu pour être exclusivement utilisé avec des lampes de 250 watts QT 8500. Son utilisation avec tout autre type de lampe peut être dangereuse et annuler la garantie.
2. Ne pas monter les lampes sur une surface inflammable.
3. Maintenir à une distance minimum de 1.0 mètre de matières inflammables.
4. Ne remplacer les fusibles qu'avec des modèles et valeurs assignées recommandés.
5. Respecter une distance minimum de 1.0 mètre par rapport aux objets éclairés.

MISE EN GARDE: Pour Une Protection Permanente Contre Les Chocs Électriques

1. Si cet équipement est livré sans prise de cable, veuillez connecter la prise de cable correcte selon le code suivant:
   - marron - phase
   - bleu - neutre
   - vert/jaune - terre
2. Débrancher le courant avant de changer les lampes ou d'effectuer des réparations.
3. Cet équipement doit être uniquement utilisé dans des endroits secs. Ne pas l'exposer à la pluie ou l'humidité.
4. À l'intérieur de l'équipement il n'y a pas de pièces remplaçables par l' utilisateur. Confiez l'entretien à un personnel qualifié.

5. Equipement de Classe I - Cette piece fixe utilise une prise de courant branché à la terre et elle ne doit pas être branché à une source électrique, non reliée à la terre, à double fil.

MISE EN GARDE: Pour Une Protection Permanente Contre Des Expositions Excessives Aux Rayons Ultra Violets (UV)

1. Ne pas utiliser cet appareil si le boîtier de la lampe n'est pas complètement fixé ou si les blindages, lentilles, ou écrans ultraviolets sont endommagés.
2. Changer les blindages ou les écrans ultraviolets s'ils sont visiblement endommagés au point que leur efficacité aient été altérée, par exemple par des fissures ou de profondes égratignures.
3. Ne jamais regarder directement la lampe quand celle ci est allumée.

MISE EN GARDE: Pour Une Protection Permanente Contre Les Blessures Corporelles

1. Lors du montage, utiliser un câble de sécurité secondaire.
2. Les surfaces de l'appareil peuvent atteindre des températures de 67° C. Laisser refroidir pendant 5 minutes avant la manipulation.
3. Changer la lampe si elle est endommagée ou thermiquement déformée.

Anhang D
WICHTIGE HINWEISE FÜR IHRE SICHERHEIT

WARNUNG: Zum Schutz vor Brandgefahr

1. Dieses Gerät darf nur mit 250 Watt Lampen vom Typ QT 8500 von Philips verwendet werden. Der Gebrauch irgend eines anderen Lampentyps könnte Sie gefährden und Ihre Garantie außer Kraft setzen.
2. Das Gerät nie auf einer feuergefährlichen Fläche montieren.
3. Stets einen Mindestabstand von 1 Meter zu brennbaren Materialien einhalten.
4. Zum Ersatz nur Sicherungen verwenden, die dem vorgeschriebenen Typ und Nennwert entsprechen.
5. Einen Mindestabstand von 1 Meter zu den angestrahlten Objekten einhalten.

WARNUNG: Zum Schutz Gegen Gefährliche Körperströme

1. Wenn dieses Gerät ohne einen Netzkabelstecker erhalten wurde, ist der entsprechende Netzkabelstecker entsprechend dem folgenden Code anzubringen:
   - Braun - Unter Spannung stehend

- Blau - Neutral
- Grün/Gelb - Erde

2. Vor dem Austauschen von Lampen oder vor Wartungsarbeiten stets den Netzstecker ziehen.
3. Diese Geräte sind nur zum Einbau in trockenen Lagen bestimmt und müssen vor Regen und Feuchtigkeit geschützt werden.
4. Servicearbeiten sollten nur von Fachpersonal ausgeführt werden. Das Gerät enthält keine wartungsbedürftigen Teile.
5. Dieses Gerät gehört zur Klasse 1 - Dieser Beleuchtungskörper verwendet eine geerdete Fassung und sollte nicht an eine zweipolige, ungeerdete Stromversorgung angeschlossen werden.

WARNUNG: Zum Schutz Gegen Übermässige Ultraviolett (UV)-bestrahlung

1. Benutzen Sie dieses Gerät nur, wenn das komplette Lampengehäuse fest eingebaut ist; ebenfalls dürfen keine der Schutzabdeckungen, Linsen oder der UV-Schutz Beschädigungen aufweisen.
2. Die Schutzabdeckungen, Linsen und der UV-Schutz müssen ausgewechselt werden, wenn sie sichtlich dermaßen beschädigt sind, daß sie ihre Wirksamkeit einbüßen, z.B. infolge von Rissen oder tiefen Kratzern.
3. Nie direkt in die eingeschaltete Lampe schauen.

WARNUNG: Zum Schutz Vor Verletzungen

1. Verwenden Sie bei der Installation des Beleuchtungskörpers ein zusätzliches Sicherheitskabel.
2. Die Oberflächen des Gerätes können Temperaturen bis zu 67° C erreichen. Vor dem Anfassen stets 5 Minuten lang abkühlen lassen.
3. Falls die Lampe beschädigt oder durch Wärmeeinwirkung verformt ist, muß sie ausgewechselt werden.

Apéndice D
INFORMACIÓN IMPORTANTE DE SEGURIDAD

ADVERTENCIA: Para Protección Continua Contra Incendios

1. Se ha diseñado este equipo para usarse con lámpara tipo Philips QT 8500, 250 vatios. El uso de cualquier otro tipo de lámpara puedá resultar peligroso, y puedá anular la garantía.
2. No monte el equipo sobre una superficie inflamable.
3. Mantenga una distancia mínima de materiales combustibles de 1,0 metro.
4. Cambie los fusibles únicamente por otros que sean del tipo y la clasificación especificadas.
5. Guarda una distancia mínima a objetos iluminados de 1,0 metro.

ADVERTENCIA: Para La Protección Continua Contra Electrocuciones

1. Si se recibió este equipo sin el enchufe de alimentacion, monte usted el enchufe correcto según el clave siguente:
   - moreno - vivo
   - azul - neutral
   - verde/amarillo - tierra
2. Desconecte el suministro de energía antes de recambiar lámparas o prestar servicio de reparación.
3. Este equipo se adecua a lugares secos solamente. No lo exponga a la lluvia o humedad.
4. Derive el servicio de reparación de este equipo al personal calificado. El interior no contiene repuestos que puedan ser reparados por el usuario.
5. Equipo de Clase 1. Este aparato emplea un enchufe hembra del tipo unido a tierra, y no tiene por finalidad conectarse a una fuente de alimentación bifilar y sin puesta a tierra.

ADVERTENCIA: Para Protección Continua Contra La Exposición A Radiación Ultravioleta (UV) Excesiva

1. No opere este equipo sin tener colocada en su lugar la caja protectora completa de la lámpara o bien, si el blindaje, los lentes o las pantallas ultravioletas están dañadas.
2. Cambie el blindaje, los lentes o las pantallas ultravioleta si nota una avería visible, a tal grado que su eficacia se vea comprometida. Por ejemplo, en el caso de grietas o rayaduras profundas.
3. Jamás mire directamente a la lámpara en tanto ésta esté encendida.

ADVERTENCIA: Para Protección Continua Contra Lesiones Corporales

1. Use cable secundario de seguridad al montar este aparato.
2. Las superficies del equipo pueden alcanzar temperaturas máximas de 67 grados centígrados. Deje que se enfríen por 5 minutos antes de tocarlas.
3. Cambie la lámpara si ésta se avería o deforma por acción térmica.

Appendice D
IMPORTANTI INFORMAZIONI PER LA SICUREZZA

AVVERTENZA: Per La Prevenire Di Incendi

1. Questo apparecchio è stato disegnato per l'impiego esclusivo di lampade tipo QT 8500, 250 Watt. L'uso di qualsiasi altro tipo di lampada può essere pericoloso e può annullare la garanzia.
2. Da non montare sopra una superficie infiammabile.
3. Mantenere l' apparecchio a un minimo di 1.0 metri (3.28 piedi) di distanza dai materiali combustibili.

4. Rimpiazare i fusibili usando soltanto quelli del tipo e della taratura adatta.
5. Mantenere una distanza minima di 1.0 metri (3.28 piedi) dagli oggetti accesi.

AVVERTENZE: Per Prevenire Le Scosse Elettriche

1. Se questa apparecchiatura è stata consegnata senza una spina del cavo di alimentazione, collegare la spina appropriata del cavo di alimentazione in base ai seguenti codici:
   - marrone - sotto tensione
   - blu - neutro
   - verde/giallo - terra
2. Questa apparecchiatura deve essere messa a terra
3. Disinnestare la corrente prima di cambiare la lampadina o prima di eseguire qualsiasi riparazione.
4. Questa apparecchiatura e' da usarsi in ambienti secchi. Non e' da essere esposta ne alla pioggia ne all' umidita'.
5. Per qualsiasi riparazione rivolgersi al personale specializzato. L' utente non deve riparare nessuna parte dentro l' unita'.
6. Apparecchio di classe I - questo apparecchio è fornito di presa bipolare + terra e non deve essere collegato a rete sprovvista di terra.

AVVERTENZE: Per Proteggersi Contro Le Radiazioni Dei Raggi Ultravioletti

1. Non usare questa apparecchiatura se il sistema di chiusura della lampadina non e' completo o se gli scudetti, le lenti, o gli schermi ultravioletti si sono visibilmente danneggiati di maniera tale che la loro efficacia sia stata ridotta --- ad esempio, se vi sono visibili spaccature o graffi profondi.
2. Mai guardare direttamente verso la lampadina quando sia accesa.

AVVERTENZE: Per La Prevenzione Costante Di Danni Fisici Alle Persone

1. Al montare questa apparechiatura, usare un secondo cavo di sicurezza.
2. Le superfici della apparecchiatura possono arrivare a temperature di 67 gradi centrigradi (153 gradi f). Aspettare 5 minuti prima di maneggiare.
3. Cambiare la lampadina se si danneggia o se si e' deformata dovuto alle alte temperature.

VIGTIG FIKKER HEDS INFORMATION - DANMARK

Advarsel: Beskyttelse mod elektrisk chock.
Vigtigt! Lederen med gul/groen isolation maa kun tilsluttes en klemme maerket eller

Glossary

Access door

The door that allows you to access the internal components of Trackspot. See Figure 3-1 on page 3-2.

Channel block

The contiguous block of DMX 512 channels a fixture uses to control its constructs such as color wheel, gobo wheel, pan, tilt, etc.

Color corrector

A means of matching a specific color temperature to simulate standard types of light, such as Tungsten light or daylight. Trackspot uses a daylight Color Temperature Blue (CTB) color corrector.

Color temperature

A term used to describe the balance or content of each spectral component of white light. Color temperature, in turn, relies on the concept of the *black body*.

A black body is a theoretical object that absorbs all of the energy that contacts it. Heating a black body causes it to emit radiation. When the spectral composition of a black body matches the spectral composition of a white light source, the temperature of the black body (in degrees Kelvin) is the color temperature of the light source.

For example, a light source that is rated at 3200° Kelvin (such as the light source used in Trackspot) matches the radiation of a black body heated to 3200° Kelvin.

Because not all light sources exhibit a smooth spectral power distribution, color temperature is an approximate measure of a lamp's spectral output.

Constructs

Features of the fixture (such as color wheel, gobo wheel and shutter). A controller (such as the Intellabeam LCD Controller for Trackspot) uses constructs to make it easy to program your show.

Control mode

A method of sending data (either analog or digital) to a fixture. There are four control modes available for Trackspot: DMX 512 protocol, LWR protocol, standard analog, or stand alone operation.

Dichroic

A *dichroic* (from Greek, meaning "two-color") filter achieves a richly-saturated color without using any pigmented (colored) materials. In simple terms, it achieves this effect by either reflecting or "cancelling out" through destructive interference all but a narrow range of the light spectrum.

The "dichroic" name refers to the fact that one color (or broad range of colors) is reflected or cancelled out, and one color (or narrow range of colors) is transmitted through the dichroic filter.

The dichroics used in Trackspot are all manufactured at the High End Systems Optical Coating and Assembly Laboratory in Austin, Texas. They are made from a base of low expansion glass material coated with multiple, microscopic layers of specialized materials separated by *junctions* that either transmit or reflect certain wavelengths of light, accounting for the resulting color.

Dichroic filters offer a number of advantages over traditional gel filters: since they are made of low expansion glass and absorb almost no heat themselves, they theoretically have no failure mechanism; they transmit more light than gels; and their resultant colors are more richly-saturated than is possible with a gel.

Dichroics are currently used for all Trackspot color and gobo wheel dichroic filters. (Dichroics are also used on other High End Systems fixtures.)

DMX 512 control protocol

DMX 512 is a standard method of controlling lighting fixtures and other devices (such as lasers and hazers). Developed by the United States Institute of Theatre Technology (USITT), DMX 512 is supported by leading entertainment industry equipment manufacturers, such as High End Systems.

DMX 512 (*D* for *digital*, *MX* for *multiplex* and *512* is the number of channels per link) is a reliable, efficient and well-understood method of controlling lighting devices. Its strength lies in its ability to control virtually any mix of DMX-compatible devices on the same link using a single DMX-compatible controller.

See also "LWR control protocol."

DMX channel

The DMX 512 protocol allows a total of 512 channels to be used on a particular link. You must assign a unique starting channel to each Trackspot you wish to respond independently

to control commands. Multiple fixtures can be assigned the same channel if you wish them all to respond to control commands in the same way.

Fixture order

The control scheme used by LWR protocol, rather than a starting channel which is used by DMX protocol.

Gobo

A metal disc with a shape or pattern cut out of the metal to form a specific beam shape or pattern when used in Trackspot. Some gobos contain dichroic glass. Custom gobos are designed and manufactured at High End Systems. See "Optional Accessories" on page Intro-6 for ordering information.

Homing

The process of moving to a "home" or starting point that is set by the fixture. In Trackspot, the pan and tilt motions of the mirror, the shutter, and the color and gobo wheels all have a designated home.

Hot Mirror

(Also called *infrared filter* or *heat filter*.) A piece of dichroic glass placed over the opening of the reflector; see Figure 3-12 on page 3-10. Its purpose is to eliminate infrared and ultraviolet wavelengths, both of which fall far outside the visible light spectrum; therefore, light output is not affected. It also helps prevent heat buildup inside the fixture.

LED (Light Emitting Diode) indicator

A light on the rear panel of the fixture that indicates activity of the fixture's cooling fan, enable (power input voltage), and audio microphone.

Link

A group of fixtures joined by connecting data cables that receive data from a controller or master fixture.

Luminaire

Another word for "fixture" or "lighting equipment."

Lightwave Research (LWR) protocol

The native control protocol for Trackspot, LWR protocol offers all the features of DMX 512 plus it gives you 10-bit resolution for mirror positioning. Other control mode protocols only allow for 8-bit resolution.

MSpeed

A means of defining the time it takes for a motor to move to a different defined position.

Operating mode

A setting that controls a fixture's specialized function (such as Auto Dim Override and Lamp Save) while the fixture is configured for a control mode. There are two operating modes, Self Test and Setup (Focus), which override incoming data from a controller.

Optical sensor

A piece of equipment using an infrared beam that "senses" the homing slot on a wheel to determine the wheel's home or starting point.

Optimize

The process of positioning a lamp inside its reflector to achieve the brightest possible light output with the brightest point of light in the center of the beam. An optimized lamp prevents the beam from damaging other internal components inside the fixture.

QT 8500

A lamp specifically designed for use with Trackspot. This lamp combines affordability, long lamp life (300 hour average), reliability, high output, and stable color temperature throughout the life of the lamp.

Starting channel

The first channel in a specific block of contiguous channels used by a fixture in DMX 512 protocol. For example, in a link of Trackspot fixtures, the second fixture would use channel 8 as its starting channel due to Trackspot's 7-channel block structure.

Terminator

A terminator is a resistor inside an XLR connector. It is used to prevent the digital data from continuously "echoing" up and down the data link. A terminator must be used on the last fixture in every link, except for those fixtures controlled by standard analog control. For instructions on constructing a terminator, see "Constructing Terminators" on page 2-11.