PILOT WASH

PR-2302

This product manual contains important information about the safe installation and use of this projector. Please read and follow these instructions carefully and keep this manual in a safe place for future reference.

PR LIGHTING LTD
571 Yingbin Road Dashi Panyu Guangzhou 511430, China
http://www.pr-lighting.com

INDEX

SECTION	PAGE
SAFE USAGE OF THE PROJECTOR	3
INSTALLING THE PROJECTOR	4
FITTING THE LAMP	4
POWER SUPPLY – MAINS	5
OPERATION AND STAND - ALONE MODE	5
XLR CONNECTORS AND TERMINATOR	6
CONTROLLER MODE - DMX OPERATION	7
DMX CONTROL CHANNEL FUNCTIONS	8
MAINTENANCE	8
KEEPING THE PROJECTOR CLEAN	9
TROUBLESHOOTING	9
TECHNICAL DATA	9
DIMENSIONS AND LIGHT OUTPUT	10
ELECTRICAL DIAGRAM	11

Please note that as part of our ongoing commitment to continuous product development, specifications are subject to change without notice. Whilst every care is taken in the preparation of this manual we reserve the right to change specifications in the course of product improvement. The publishers cannot be held responsible for the accuracy of the information herein, or any consequence arising from them.

Every apparatus is tested completely and packed properly by the manufacturer. Please make sure the packing and / or the apparatus is in good condition before your installation and use. Should there be any damage caused by transportation, consult your dealer and do not use the apparatus. But any damage caused by improper use will not be assumed by the manufacturer and / or dealer.

ACCESSORIES

THESE ITEMS ARE PACKED TOGETHER WITH THE PROJECTOR

- Mounting Bracket (2 PCS)
- M8x25 screw for mounting brackets (4 PCS)
- Power-cord (1 PCS)
- XLR plug (1 PCS)
- XLR socket (1 PCS)
- Safety cord (1 PCS)
- This manual (1 PCS)

INTRODUCTION

Thank you for purchasing the product PILOT WASH, PR-2302.

This product manual contains important information about the safe installation and use of this projector. Please read and follow these instructions carefully and keep this manual in a safe place for future reference.

The PILOT WASH is an innovative projector with an elegant housing, which is made from high intensity and heat–resistant complex plastic. The productor complies to CE norms and standards and uses international protocol DMX 512. It can be used as a stand-alone unit or linked to a controller, so it is suitable for many different applications.

PILOT WASH features full CYM colour mixing with high resolution stepper motors and 6 dichroic filters producing rainbow effect when fast moving. And it features an independent adjustable strobe/shutter, effects wheel and manual adjustable magnifying/lessening images and soft/focusing beams. It can be setup easily with the touch-switches and a digital display screen.

SAFE USAGE OF THE PROJECTOR

When unpacking and before disposing of the carton check there is no transportation damage before using the projector. Keep the carton well for future possible transportation. Should there be any damage caused by transportation, consult your dealer and do not use the apparatus.

The projector is for Indoor use only, IP20. Use only in dry locations. Keep this device away from rain and moisture, excessive heat, humidity and dust. Do not allow contact with water or any other fluids, or metallic objects.

The projector is not designed or intended to be mounted directly on to inflammable surfaces.

The projector is only intended for installation, operation and maintenance by qualified personnel.

The projector must be installed in a location with adequate ventilation, at least 50cm from adjacent surfaces. Be sure that no ventilation slots are blocked.

Do not project the beam onto inflammable surfaces, minimum distance is 3m. 3m

Avoid direct exposure to the light from the lamp. The light is harmful to the eye.

Do not attempt to dismantle and/or modify the projector in any way.

Electrical connection must only be carried out by qualified personnel.

Before installation, ensure that the voltage and frequency of power supply match the power requirements of the projector.

It is essential that each projector is correctly earthed and that electrical installation conforms to all relevant standards.

Do not connect this device to any dimmer pack.

Make sure that the power-cord is never crimped or damaged by sharp edges. Never let the power-cord come into contact with other cables. Only handle the power-cord by the plug. Never pull out the plug by tugging the power-cord.

Keep the lamp clean. Do not touch the lamp glass with bare hand.

The projector should always be installed with a secondary safety fixing. A safety cord is supplied for this, it should be attached as shown in “installing the projector” section.

The lamp used in this projector is an MSD 250W discharge lamp. After being switched off don’t attempt to restart the projector until lamp has cooled, this will require approx 15 minutes. Switching the lamp on and off at short intervals will reduce the life of both the lamp and the projector. But occasional breaks will prolong the life of the lamp and projector.

Never run the projector without a lamp.

There are no user serviceable parts inside the projector, do not open the housing and never operate the projector with the covers removed.

Always disconnect from the mains, when the device is not in use or before cleaning it or before attempting any maintenance work.

If you have any questions, don’t hesitate to consult your dealer or manufacturer.

INSTALLING THE PROJECTOR

The projector should be mounted via its bracket using 2 M12 bolts. The bracket itself attaches to the underside of the projector with 4 M8X25 bolts provided. Always ensure that the projector is firmly anchored to avoid vibration and slipping whilst functioning. Always ensure that the structure to which you are attaching the projector is secure and is able to support a weight of 20.1Kg for each PILOT WASH. For safety the projector should have a secondary fixing with a safety chain through the holes on the underside of the unit. You can adjust the screw illustrated to let the Fresenel lens in or out for magnifying/lessening the images or soft/focusing the beams.

WARNING: The projector should NEVER be lifted or carried by the yoke.

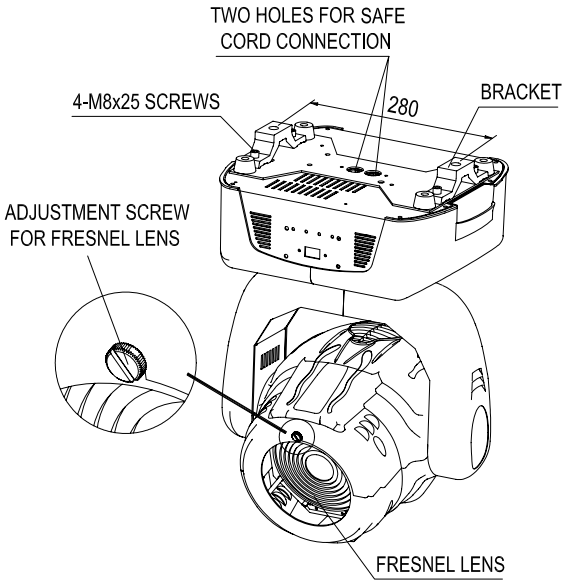

FITTING THE LAMP

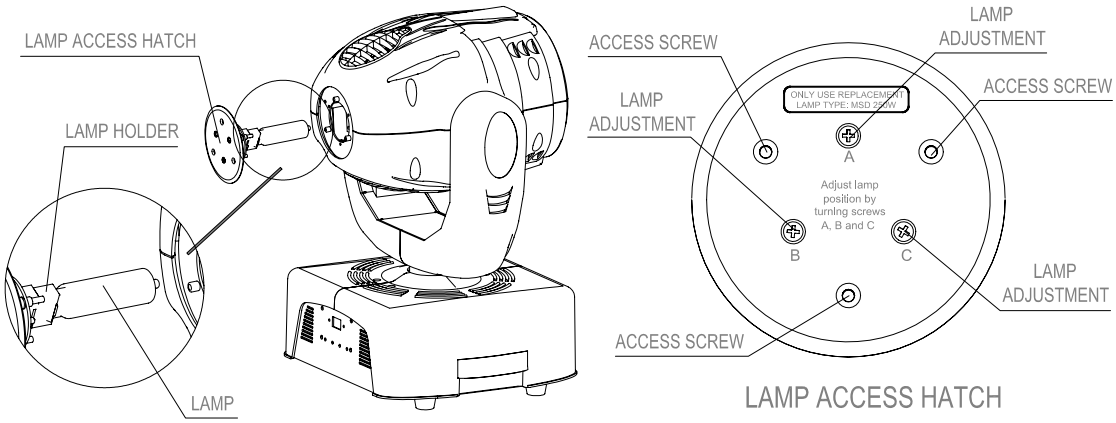

Loosen the 3 access screws at the rear of the projector and pull the lamp access hatch straight out from the real of the projector. (When changing a lamp, you must let the old lamp cool sufficiently.)
Insert an MSD 250W lamp in the lamp holder.
Reinstall the lamp access hatch, then tighten the 3 access screws.

NOTE: Close the access hatch carefully and re-tighten the 3 screws. To optimize light output it will be necessary to adjust the lamp alignment to obtain an even distribution of light within the beam. The three screws (marked A, B, and C) may be gently turned to center the lamp within the reflector. The projector should be switched on with the shutter open and the beam focused to do this, it is also advisable to allow the lamp 5 minutes to come up to full brightness before starting to align it. Note: the three screws will only need a small adjustment to centre the lamp, do not try to unscrew them completely. Read the rest of this manual and then come back to this section to align the lamp.

The MSD series are high pressure lamps with external igniters (⚠). Care should always be taken when handling these lamps. Always read the manufacturers "Instructions for use" enclosed with the lamp.

POWER SUPPLY - MAINS

Use the plug provided to connect the mains power to the projector paying attention to the voltage and frequency marked on the panel of the projector. It is recommended that each projector is supplied separately so that they may be individually switched on and off.

IMPORTANT: It is essential that the green/yellow conductor is correctly earthed.

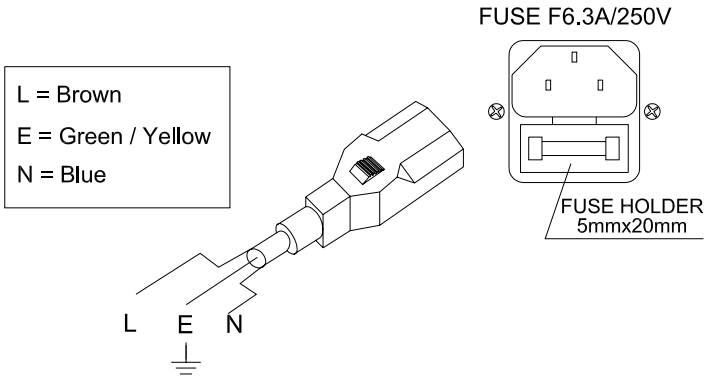

OPERATION AND STAND-ALONE MODE

The projector may be operated either in Stand-Alone automatic mode or be controlled via standard DMX512 by a controller. With the touch-switches and the digital display screen, DMX start address can be easily set and the various setup options may be configured.
The display shows the DMX start address after the projector is switched on (if you have already set the DMX start address and saved it, the screen will display the last setting).

TO SET THE DMX START ADDRESS

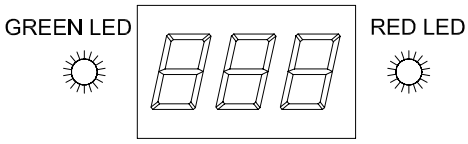

Press the UP or DOWN buttons and the display will show the DMX start address.

Confirm your choice by pressing the ENTER button, this will save and set the DMX start address.

The display will show the latest setting each time the projector is powered up.

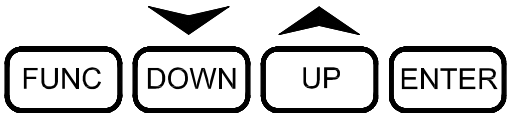

To control the projector with a DMX controller the DMX start address must be set.

Ensure that none of the Stand-Alone options are set or they will interfere with correct DMX operation.

SETUP OPTIONS - PROJECTOR CONFIGURATION

To browse through the various Setup Options, press the FUNC button consecutively. There are 6 Option codes (1~6), and each code has a specific function. The functions provided are listed in the following table.

Once you have selected the desired operation code, press the key UP or DOWN to select “y” (means ON) or “no “ (means OFF). N = NO, Y = YES.

Press the key ENTER to save the selected function and configuration. If the display is showing “y”, then the setting has been enabled. In the same way, if it was showing “n” when you pressed ENTER the option has been disabled.

The Red LED will flash during this operation.

SETUP OPTIONS		
CODE	**CHOICE**	**FUNCTION**
1	Y	Tilt inversion enable-Tilt is inverted
	N	Tilt inversion disable-Tilt is normal
2	Y	Pan inversion enable-Pan is inverted
	N	Pan inversion disable-Pan is normal
3		Not used
5	Y	Automatic programmes (effect 1) enable
	N	Automatic programmes (effect 1) disable
4 5	Y Y	Automatic programmes (effect 2) enable
4 5	N Y or N	Automatic programmes (effect 2) disable
6	Y	16bit Pan/Tilt movement resolution enable
	N	16bit Pan/Tilt movement resolution disable
7		Not used
8		Not used

STAND-ALONE MODE

For Stand-Alone operation enable a combination of options 4 and 5.

XLR CONNECTORS AND TERMINATOR

XLR CONNECTORS

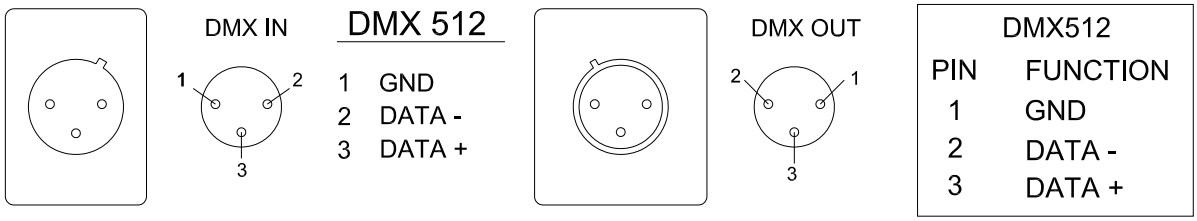

Connection between controller and projector and between one projector and another must be made with 2 core screened cable, with each core having at least a 0.5mm diameter. Connection to and from the projector is via cannon 3 pin XLR plugs and sockets which are included with the projector. The XLR's are connected as shown in the table above.
Note, care should be taken to ensure that none of the connections touch the body of the plug or each other. The body of the plug is not connected in any way. The PILOT WASH accepts digital control signals in standard DMX512 (1990) format.

5-PIN AND 3-PIN CONVERSION

PILOT WASH uses 3-pin XLR plug / socket. If your controller uses 5-pin XLR plug / socket, you should convert 5-pin plug / socket into 3-pin socket / plug as shown below.

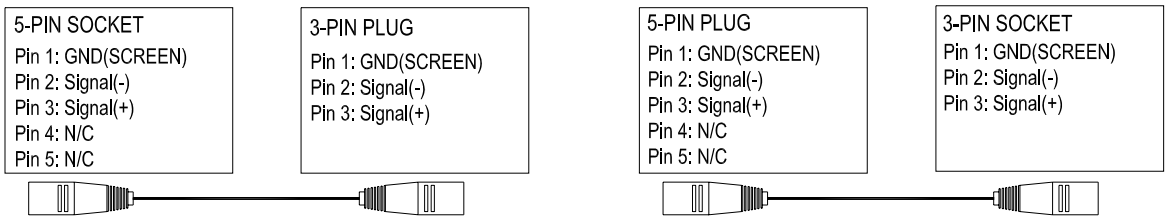

DMX TERMINATOR

In the Controller mode, the DMX output has to be connected with a DMX terminator at the last fixture in the chain. This prevents electrical noise from disturbing and corrupting the DMX control signals.

The DMX terminator is simply an XLR connector with a 120Ω (ohm) resistor connected across pins 2 and 3, which is then plugged into the output socket on the last projector in the chain. The connections are illustrated above.

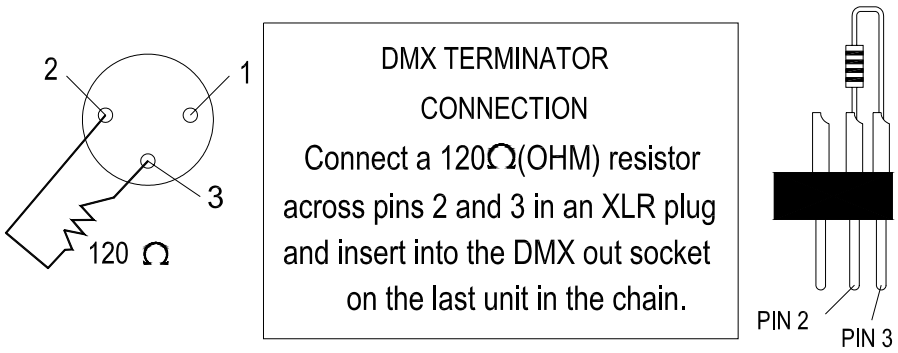

CONTROLLER MODE - DMX OPERATION

Each PILOT WASH must be given a DMX start address so that the correct projector responds to the correct control signals. This DMX start address is the channel number from which the projector starts to “listen” to the digital control information being sent out from the controller. The PILOT WASH has 10 channels, so set the No. 1 projector’s address 001, No. 2 projector’s address 011, No. 3 projector’s address 021, No. 4 projector’s address 031, and so on.
Certainly, you may use formulation: address = channels x (projector No. –1) +1
For example, for the No. 4 projector’s start address, you should calculate according to formulation: 10 x (4 – 1) +1 = 31, so you set the No. 4 projector start address 031. (How to set DMX start address please refer to “Operation” section.)
Connect the controller’s output to the first fixture’s input, and connect the first fixture’s output to the second fixture’s input. The rest may be deduced by analogy. Eventually connect the last fixture’s output to a DMX terminator as shown in the figure below.

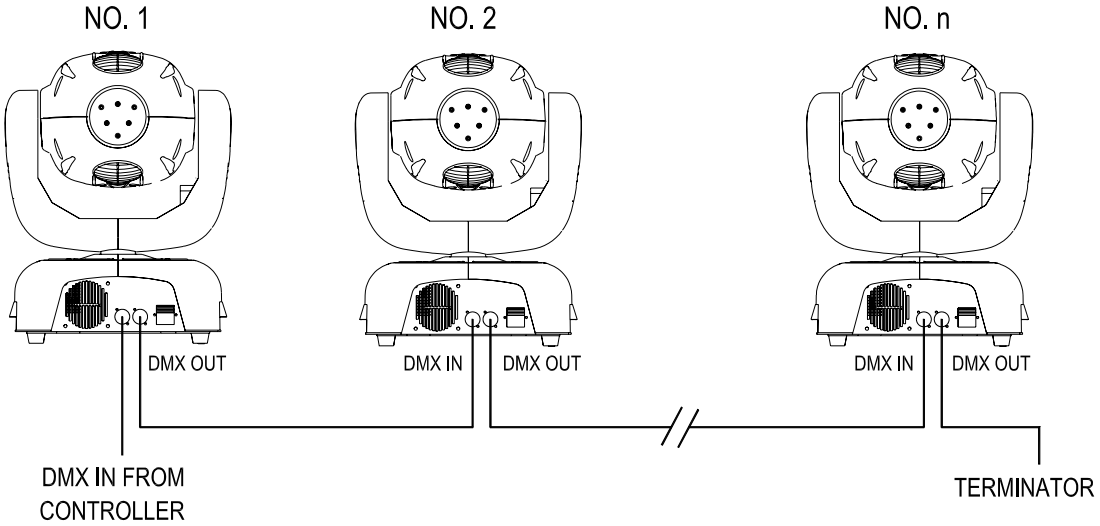

When a DMX 512 signal is received the LED will illuminate green. When not receiving a DMX signal the green and red LEDs will be off.

DMX CONTROL CHANNEL FUNCTIONS

The PILOT WASH uses 10 DMX channels. They are listed in the following table.

CHANNEL	DMX VALUE	DESCRIPTION
1 Magenta	0-255	From light magenta to dark magenta (5-7) Setup options and address reset
2 Yellow	0-255	From light yellow to dark yellow
3 Cyan	0-255	From light cyan to dark cyan
4 Shutter/Strobe	0-10	Black-out
	11-127	Open gradually from shut to full open (dimming)
	128-252	Strobe movement from slow to fast
	253-255	Open
5 Pan	0-255	Pan movement from 0° to 352°
6 Tilt	0-255	Tilt movement from 0° to 250°
7 Colour Wheel	0-27	White
	28-54	Red
	55-81	Yellow
	82-109	Orange
	110-136	Green
	137-163	Blue
	164-191	Ultraviolet
	192-255	Colours change from slow to fast till rainbow effect
8 Effects Wheel	0-31	Open/Clear
	32-223	Ribbed glass stepping rotative movement
	224-255	Frost glass
9 Pan 16bit	0-255	16 Bit Pan resolution
10 Tilt 16bit	0-255	16 Bit Tilt resolution

MAINTENANCE

If the projector's lens becomes damaged or broken it should be replaced. If the lamp becomes damaged or deformed in any way it must be replaced. If the light from the lamp appears dim this would normally indicate that it is reaching the end of its life and it should be changed at once, old lamps run to the extremity of their life can explode. If the projector does not function, check the fuses on the power socket of the projector, they should only be replaced by fuses of the same specified value 6.3A/250V (fast blow, 5mmx20mm). On the main PCB inside the projector there is also a fuse rated 4A/250V (fast blow, 5mmx20mm). Should these be damaged call a qualified technician before replacement. The projector has 2 thermal protection devices that will switch off the projector in case of overheating, should either of these operate, check that the fans are not blocked, and if they are dirty clean them before switching on the projector again. Check that the fans are operational, if not call a qualified technician.

Any maintenance work should only be carried out by qualified technicians.

KEEPING THE PROJECTOR CLEAN

To ensure the reliability of the projector it should be kept clean. It is recommended that the fans should be cleaned every 15 days. The lens and dichroic colour filters should also be regularly cleaned to maintain an optimum light output. **Do NOT use any type of solvent on dichroic colour filters.**

Cleaning frequency depends on the environment in which the fixture operates: damp, smoke or particularly dirty surroundings can cause greater accumulation of dirt on the unit's optics. A soft cloth and typical glass cleaning products should be used in cleaning. It is recommended to clean the external optics at least once every 20 days and clean the internal optics at least once every 30 / 60 days.

Do not use any organic solvent, e.g. alcohol, to clean the housing of the apparatus.

TROUBLESHOOTING

PROBLEM	ACTION
The projector doesn't switch on	Check the fuses on the power socket. Replace the lamp.
The lamp comes on but the projector doesn't respond to the controller	Make sure that the projector is correctly DMX configurated. Replace or repair the DMX cable.
The projector only functions intermittently	Make sure the fans are working and not dirty, and the ventilation slots are not dirty.
The beam appears dim	Replace a new lamp with the specified type and rating. Check the optics are clean.
The projected image appears to have a halo	Carefully clean the optical group lenses and the projector components.
Defecting projection	Check the lens are not broken. Remove dust or grease stored on lenses.

TECHNICAL DATA

Power supply:	230V AC 50Hz
Optional:	240V, 220V, 200V, 120V, 100V AC 50/60Hz
Power consumption:	480W at 220V
Lamp:	MSD 250W discharge lamp (Working life: 2000h)
Control:	DMX 512
Running model:	Stand-alone / Controller
Colours:	6 dichroic colours plus white and rainbow effect
	Cyan, Yellow, and Magenta colours
Shutter/Strobe:	2 Blade shutter for dimming, adjustable from 1~7 F.P.S.
Effects beam:	Soft/focus beam, magnifying/lessening image by adjusting Fresnel lens
Movement:	Pan movement 370° -Tilt movement 265°
Net weight:	20.1kg
Others:	Auto thermal cut-off

DIMENSIONS AND LIGHT OUTPUT

DIMENSIONS

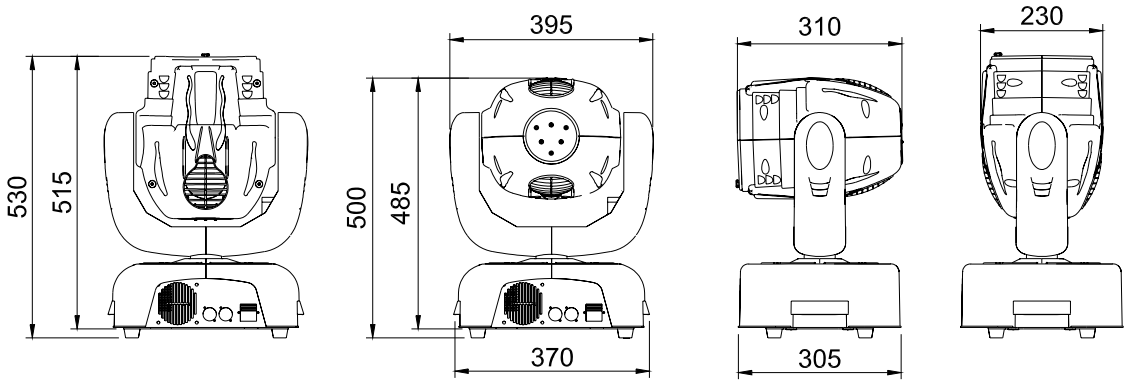

LIGHT OUTPUT

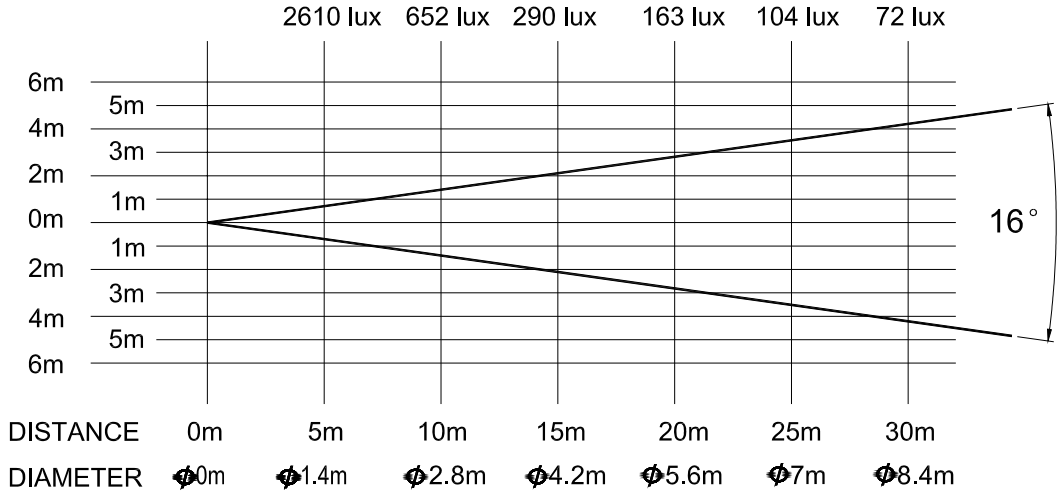

ELECTRICAL DIAGRAM

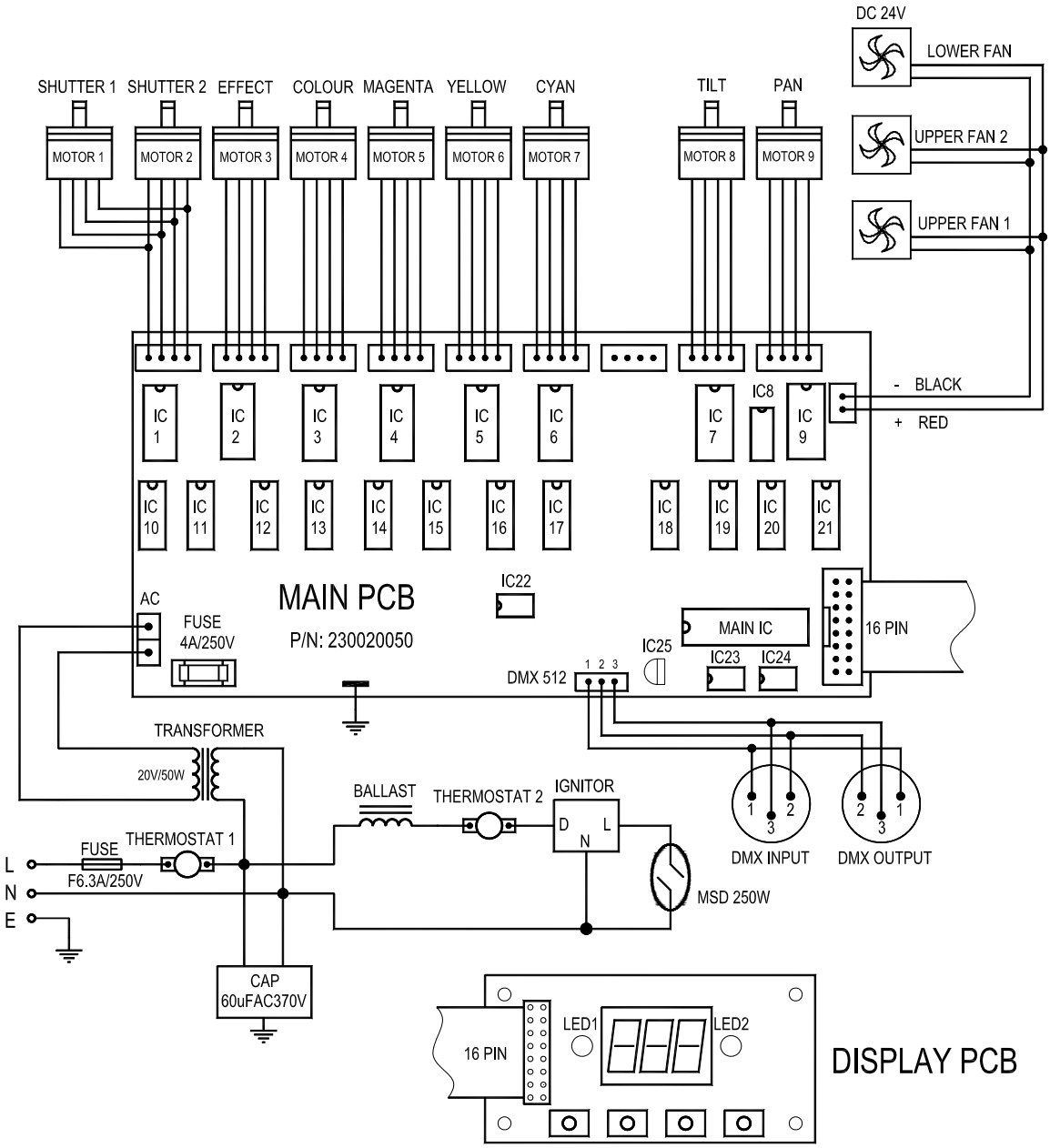

COMPONENT ORDER CODES

NAME	PART NO.	REMARK
TRANSFORMER	040030035	100V/120V/230V AC 50/60Hz
THERMOSTAT 1	190010065	75℃/10A/250V
CAPACITOR	140010042	32μF/370V
BALLAST	040070036	230V/50-60Hz
THERMOSTAT 2	190010054	95℃/10A
IGNITOR	040090016	230V/50Hz
FAN	030069006	DC24V
(SHUTTER 1) MOTOR (MOTOR 1)	030040023	17HS0002-38L, Φ5X20
(SHUTTER 2) MOTOR (MOTOR 2)	030040080	17HS0002-48L, Φ5X12.5
(EFFECT) MOTOR (MOTOR 3)		
(COLOUR) MOTOR (MOTOR 4)		
(MAGENTA) MOTOR (MOTOR 5)	030040023	17HS0002-38L, Φ5X20
(YELLOW) MOTOR (MOTOR 6)		
(CYAN) MOTOR (MOTOR 7)	030040024	17HS0002-03L, Φ5X28
(TILT) MOTOR (MOTOR 8)	030040052	23HS0015L, Φ6.35X21
(PAN) MOTOR (MOTOR 9)	030040053	23HS2029L, Φ6.35X21
IC1~IC6	170050010	DRIVER CHIPS
IC7	170110004	DRIVER CHIP
IC8	170050001	ARITHMETIC AMPLIFIER CHIP
IC9	170110004	DRIVER CHIP
IC10	170040014	TTL LOGICAL CHIP
IC11~IC16	170170037	D/A REVERSION CHIP
IC17	170040014	TTL LOGICAL CHIP
IC18, 19	170170037	D/A REVERSION CHIP
IC20, 21	170040014	TTL LOGICAL CHIP
IC22	170170039	STABLE-VOLTAGE CHIP
IC23	170170012	BUS CHIP FOR RECEIVING/TRANSMITTING
IC24	170040033	EEPROM
IC25	170040035	RESET CHIP
MAIN IC	230040123	MICROPROCESSOR
PAN DRIVE BELT (NOT SHOWN)	290151217	309-3M-103Z 103 TEETH
TILT DRIVE BELT (NOT SHOWN)	290151218	HTD420-3M-140Z 140 TEETH

PR LIGHTING LTD

571 Yingbin Road Dashi Panyu Guangzhou 511430, China
TEL: +86 (20) 8478 1888
FAX: +86 (20) 8478 6023

P/N: 321010045
Last Revision: 14:05:2003